THE DHURWA OF BASTAR

KIDAR NATH THUSU

THE DHURWA OF BASTAR

KIDAR NATH THUSU

सत्यमेव जयते

ANTHROPOLOGICAL SURVEY OF INDIA
GOVERNMENT OF INDIA
CALCUTTA 13

Published by Dr D. K. Sen, Director, Anthropological Survey of India,
Indian Museum (New Building), 27 Jawaharlal Nehru Marg, Calcutta-13
and printed by Shri A. K. Chatterjee at Jnanodaya Press,
17 Hayat Khan Lane, Calcutta-9

WITHOUT THE EXPRESSED PERMISSION FROM THE DIRECTOR, ANTHROPOLOGICAL SURVEY OF INDIA ANY PORTION OF THIS MEMOIR INCLUDING ITS PLATES CANNOT BE REPRODUCED PARTLY OR WHOLLY

Memoir No. 16 : 1965

Published on the 5th March, 1968

CONTENTS

Introduction	1
The Setting	6
The Settlement Pattern of the Marenga Village	16
Material Possessions	29
Social Structure	57
Life Cycle Activities	92
Inter-ethnic Relationship	121
Economic Organization	138
Religious Beliefs and Practices	163
Panchayat System	198
Folk-tales	212
Appendix	233
References	242

DHURWA TRACT
BASTAR MADHYA PRADESH
SCALE
4 0 4 8 12 Miles
DHURWA TRACT IN BASTAR (M.P.)
KANKER
BHANUPRATAPPUR
KANKER
ANTAGARH.
KONDAGAON
NARAYANPUR
KONDAGAON
BIJAPUR
JAGDALPUR
BHOPALPATNAM
DANTEWADA
JAGDALPUR
DARBA
BIJAPUR
DANTEWADA
KONTONGPAL
SUKMA
KONTA
KONTA
R. INDRAVATI
NAGARNAR
DHANPUNJI
JAGDALPUR
KARUNDI
BURUNGPAL
CHITAPADAR
KANGER R.F.
JAMAWADA
CHINGPAL
KAMANAR
MOALIPADAR
TIRIA
GUNALWADA
KARKA GUDA
KOLAB (SABRI) RIVER
CHANDERGIRI
CHINDAWADA
KARALGUR
NETANAR
ELLANGAR
KOLENG
KANDANAR
MUNDAGARH
GHINDGARH
MAREGA
TONGPAL
HAMIR GARH
JAIMER
KOKANAR
N
NETANAR
OLER
ROKEL
GUDRA
TALNAR
GUMA
GANJENAR
CHIND - GARH
PAKELA
MURTONDA
SUKMA
REFERENCES
STATE BOUNDARY
RIVER
HILL RANGES
RESERVE FOREST
ROAD
VILLAGES

CHAPTER ONE

INTRODUCTION

Objectives of the Study

The district of Bastar in Madhya Pradesh is one of those regions in Central India, which serves as the meeting place of the North and South India linguistically, historically and culturally; what is more, the different tribal groups who constitute nearly threefourths of the district population have remained, comparatively speaking, less exposed to outside influences. According to 1961 census, it contained an area of 15,124 sq. miles, and the Scheduled Tribes numbering 8,43,749 formed 72 per cent of the population of the district. Prior to its integration with Madhya Pradesh State in 1948, however, the district of Bastar consisted of the two feudatory states of Kanker and Bastar. The former state of Bastar lying to the south of the Chatisgarh plains contained (according to 1931 census) an area of 13,062 sq. miles with the primitive tribes forming 73 per cent of the population of the state, being ruled since the early 15th century by the Kakatiya rulers who are said to have migrated from Warangal (Andhra) due to the Muslim invasions.

The monographic studies on the Scheduled (or the so called primitive) Tribes in Bastar were undertaken by the Central India Station of the Anthropological Survey of India, Nagpur, with the main objective to grasp the range of variation in cultural forms due to ethnic and other significant factors. It was also contemplated to compare, later on, the important tribes dwelling in Bastar in order to ascertain the social, cultural and linguistic distance among them. Before actually undertaking the field studies on the respective tribes of Bastar, we made a comprehensive study of the Dussehra festival at Jagdalpur, the capital city of Bastar, in a field party in September-October, 1957 under the guidance of Dr. S. Sinha, then attached to the Central India Station, Nagpur.

While a fairly detailed description of the major aspects of the socio-cultural life of the Hill Maria, Bison-horn Maria and the Muria of Bastar (Ghotul) is available; but so far as other important tribal groups living in Bastar are concerned, only scanty

references are found scattered in different published works. Accordingly, it was found necessary to take up for the individual studies of three of these little-known tribes, living in the contiguous areas in Bastar, namely the Bhatra, the Dhurwa and the Dorla; and thus the study on the Dhurwa was entrusted to me. Here it may be added that generally very few authors followed a uniform coverage of ethnographic materials in their published monographs, so, we noted down, in the first instance, the chapter headings of a number of ethnographic monographs available to us, and it is on that basis that we made a tentative outline to suit our purpose. Secondly, it was impressed upon us that we should collect the field data, especially, on some concrete focal points (e.g., clans, lineages and family, land tenure and its social implications, etc.) so that it would be possible to view the whole culture in these terms.

One of the earliest references concerning the Dhurwa of Bastar is contained in the Report on the Dependency of Bustar by Capt. Glasford, the then Deputy Commissioner of Sironcha (1862: para 82). He has shown more or less accurately their main concentration in Bastar (state); but the difficulty arises when he lumped them together under the two (separate) names of the Tugara and the Parja. It is an admitted fact that the Dhurwa of Bastar were till recently referred by the common name of the Parja, while the term Dhurwa was previously restricted for the headman of their villages in contra-distinction to the term Peda which was used to designate the Bison-horn Maria headman of the villages. At present, all of them (irrespective of the fact whether he is a headman or not) would like to be known as Dhurwas and resent if they are called the Parjas. Nonetheless, some of the old informants assert that since they abstained since a long time back from taking beef, so they distinguished themselves from the rest of the beef eating Parjas by being designated as the Raja Parjas. It is further maintained by them that this particular group of the Raja Parjas living in Bastar were well-known for making the bamboo baskets (*takra*); hence they were also called the Takra Parjas. If we accept the view that the Takra (Parja) and the Tugara refer to one and the same group, then the question arises as to what happened to the remaining beef eating Parja dwellers of Bastar (state). Brett (1909: para 31) answers the question by stating that "the two sub-tribes of the Parja or Dhurwa, namely, Peng and Mundra, removed to Jeypore (included under Koraput district of Orissa)". This statement is confirmed by Russel and Hiralal (1916: 372) who mention that out of the three divisions of the Parja tribes, only Tagara or Thakara is found in Bastar. More of it will be discussed later on; for the present, it will suffice

to note that whether the tribal groups under my study were called in earlier times as the Tugara (Tagara) or Takra (Thakara), albeit Parja, none of them would prefer to be known at present by any other term than that of the Dhurwa.

The Unit of Study

For undertaking the study of the total culture-pattern of the Dhurwa of Bastar, we have to determine the most appropriate unit of observation. In this connection, it will be worthwhile to examine in brief the short-comings and advantages of the various units of study : (i) The state of Bastar is, no doubt, a useful unit of study for understanding the specialized roles and the special aspects of culture, but apart from the fact that the organization of the state affects different ethnic groups and areas differently, it is too large a unit for our particular purpose in view, (ii) the *tahsil* has neither social/cultural unity nor does it possess sufficient historic depth for being considered as a unit of study. (iii) the zamindari (as in the area of my study of Sukma) is no longer sufficiently functional due to the Zamindari Abolition Act, but still it has not only significant historic depth but also it exercises comprehensive influence on its inhabitants, (iv) the pargana, too, because of its greater historic depth and its possible relation with the clan organization among some ethnic groups of Bastar continues to be nearly as important as it was before, although to be sure it cannot be as comprehensive in its definition of socio-cultural activities as the village, (v) the advantages of studying a village are that it provides the most significant stage of social inter-action in settlement pattern, land tenure, leadership, factionalism, communal ceremonialism and festivals, and, then, we can conceive of a more or less homogeneous pattern of culture common to the village community, as a whole, irrespective of the ethnic groups residing in it.

In the light of what has been mentioned above, the most suitable unit of observation for undertaking the monographic study on the tribes of Bastar is (in the words of Dr. S. Sinha) : " A village community of dominant ethic group in an area of maximum concentration of that particular ethnic group viewed in terms of significant extensions (like the zamindari, pargana, etc.), with scope for comparison of variants later on." But nowsoever comprehensive a village may be as a stage for social and cultural manifestation, many of the details of cultural life actually centre round kinship units, which may be actual or assumed or fictitious. As such, we also took note in our respective studies of such units as the tribe, clans, lineage, family and its extensions of various sorts.

The Basis of Selection of the Sample Village

For selecting the sample village for the intensive study, various alternative criteria regarding its average size, its ethnic composition, its situation and its clan organization were duly considered in the seminar meetings arranged in connection with the Bastar Project: whether the village should have nearly 100 families or it should represent a mode of the size of village communities in a particular area or among a particular ethnic group? Whether a village should be exclusively or nearly exclusively lived by one particular ethnic group or it should be dominated by one particular ethnic group but quite a few other ethnic groups should also live. Whether a village should be in a very interior area or it should be very much exposed to outside contacts or lie in an intermediate position? Whether such a village should be selected where a single clan of the particular ethnic group in which we are mainly interested dominates or it should be a multi-clan village? It was consensually held that we should study "a village in the interior area, lived primarily by the ethnic group in which we are interested and preferably dominated by a single clan". For determining the mode of village sizes, we took a rough estimate of the mode in terms of a quick reconnoitre survey of the central area of dominance of the particular group. After completing the intensive survey of the sample village, variations in terms of size, ethnic complexities, exposure to contact and existence of multi-clan, were to be followed up by moving round for short term studies of other villages.

After selecting the sample village, however, the next question for consideration was concerning the selection of the families for our study. Whether the typical families should be selected at random or sociologically. It was agreed by the participants that it would be convenient to classify the population in a village, first, in terms of broad economic classes, and, then, to select our informants and/or the typical families from each of these economic classes. It may be remarked here that in most areas of Bastar, as also elsewhere, the economic classes are defined in terms of the relative size of the landholdings.

The Field Work

For collecting the basic data in the field, proper rapport was established with our informants by presenting them with articles like the bead, necklaces, combs, mirrors, sweets and *bidis*. In addition, we treated them with consideration and sympathy, paying them in cash whenever we required their services. Above all,

we made it a point to stay in their midst for as long as was possible under the circumstances. In my case, I carried out my field work for a total period of about 10 months, of course, in three successive field trips, viz., 16.1.58 to 2.4.58, 5.11.58 to 11.4.59 and 18.11.59 to 9.1.60. My field work was largely carried out in the sample village selected for my intensive study, namely, Marenga village, while for short-term studies, I visited other villages lying in the Dhurwa tract of Bastar.

During the course of my field work, great emphasis was laid on the direct observation of the daily and the annual cycle of activities, which was supplemented by intensive interviews, census, etc. Genealogical method was extensively used in the collection of the data. Shri Sankaran, the Cine-Photo-Artist attached to the Central India Station, Nagpur, took the photographs and the cine of the Dhurwa with special reference to the Marenga village. So also were the services of Shri Iyer, the Sound Technician attached to the Station at Nagpur, utilized for tape recording the Dhurwa folk songs. It was fortuitous that I could get the help from Shri Sita Ram Dhurwa of Leda village whom I engaged as my interpreter during my field work among the Dhurwa of Bastar. Apart from the helpful attitude extended by the Government officials at different levels, the willing co-operation given by the Dhurwa and other informants was immense. Especially so was the case with the Marenga villagers who not only constructed a separate hut free of cost for my stay in their village but also showed great patience and interest during my field work carried out among them. Last but not the least, I must express my gratitude to Dr. S. Sinha, then attached to the Central India Station, Nagpur, as the Superintending Anthropologist, for not only inspiring us by words and deeds but also guiding us in more than one ways, both in the field as well as in our seminar meetings.

CHAPTER TWO

THE SETTING

The Dhurwa Population and Their Habitat

According to 1931 census, the number of persons returned as Dhurwas in the Bastar (state) was 17,568. Out of this figure, 12,361 were returned as the Parji-speaking and the remaining 5,207 were those Dhurwas who had given up their mother tongue in favour of Bhatri and/or Halbi. In other words, the non-Parji speaking persons constituted 29.64 per cent of the total number of the Dhurwa living in the former state of Bastar. Elwin (1947 : 697) has shown that the number of the Parjas (i.e., both the Parji speaking and non-Parji speaking Dhurwas) increased to 25,820 in 1941. The census of 1951 which excluded the non-Parji speaking Dhurwas, recorded the number of the Parji-speaking Dhurwas in four tahsils of Bastar district (namely, Jagdalpur, Konta, Dantewara and Kondagaon) to be 19,847. Quite possibly, the percentage of the non-Parji speaking Dhurwas to their total number in Bastar increased from nearly 30 to 40 within the last twenty years, i.e., from 5,207 in 1931 to near about 8,000 in 1951. The total number of both the Parji-speaking and the non-Parji speaking Dhurwas in Bastar, thus, comes to 28,000 in 1951. In this connection, mention may be made that the Tahsil Register of Jagdalpur recorded the number of the Dhurwa (as also those who were returned as the Parjas) in 1955 to be 22,759, while the revenue records in the Konta tahsil showed their number in 1958 as 8,860. To these combined figures may be added the number of the Dhurwa, living in the two tahsils of Dantewara and Kondagaon, which may be roughly estimated to have reached the figure of 2,700 by 1958. Thus, when all the respective figures from all the four tahsils of Bastar district are added together, we find that at the time of starting the field studies among the Dhurwa of Bastar (i.e., in 1958), they numbered approximately 34,000.

The Dhurwa occupy, at present, the central eastern portion of the Bastar district, but they are also found to overflow in some directions beyond the Kolab-Sabari river in the contiguous district of Koraput (Orissa). The Dhurwa tract in Bastar extends towards the north from the (old capital) village of Bastar and stretches below the river Indrawati across the Kanger Reserve Forest right

upto Sukma in the South—thus covering roughly a distance of 80 miles by road. This contiguous area which is, at present, occupied by the Dhurwa in Bastar remains bounded on the west by such villages as Burungpal, Rajur, Sitapur, Chandergiri, Marjum, Jaimer, Kokanar, Sona-Kokanar, Murepal and Murtonda. It is worthwhile to remark here that Glasford, the then Deputy Commissioner of Sironcha, reported a century back "that both the Tugara and Parja castes are found in a small tract of country south from Jugdalpore, extending from Seetapore to Sunkum". It is clear that the distribution of the Dhurwa population in Bastar tallies almost in all details with the one delineated above by us. So also Grigson (1938 : 40) and Elwin (1947 : 11) have shown the main concentration of the Dhurwa in Bastar. The areas shown in their respective maps, more or less correspond with that shown above concerning the Dhurwa tract. But while Elwin has put Darba as the northern limit, Grigson extended it further north upto Jagdalpur. We would, however, include in the Dhurwa tract such villages as lies till north of Jagdalpur, namely, Kachenar, Bastar, etc., and mark its southern limit by such villages as Sukma and Magipal (*alias* Gattaguda).

Among the tribal groups living on the borders of the Dhurwa tract in Bastar, mention may be made, in the first place, of the Bhatra, who surround them towards the north-east. It may be noted that the Bhatra are ranked "higher" in status than the Dhurwa in the regional caste-hierarchy, and their Bhatri speech is spreading so fast among the Dhurwa living in that area that almost all of them have adopted their language as their mother tongue, having completely forgotten their own mother tongue (viz., Parji). The Raja Muria are the other neighbouring tribal group occupying the northern portion of the Dhurwa tract. Some of the Raja Murias who have recently settled in the Dhurwa villages, call themselves, and are recognized, as the Bhatra, albeit San Bhatra, and are treated almost as "equals" by Dhurwas in the caste ranking. It is, however, the so called Bison-horn Marias who surround the Dhurwa on the west and south. They are referred commonly by the term Gonds and are assigned a "lower" status than the Dhurwa. They distinguish themselves from the (Gond) Lohar who are also essentially the Bison-horn Maria, having adopted the occupation of blacksmithy. The other important ethnic groups living in and around the Dhurwa villages in Bastar are generally regarded by the Dhurwa as the Hindus and consist of the Dhakar, the Rawat, the Kallar, the Sundi, the Halba, the Telinga and the Mahar. Excepting the last group, the rest of the (Hindu) castes are regarded as "higher" than the Dhurwa, while

the Mahar are treated as "lower" than themselves; no cooked food, not even water, is accepted by them from their hands.

A large part of the territory occupied by the Dhurwa in Bastar consists of the densely wooded hill ranges with valleys crossed by rivers and streams. The most noteworthy hill range passing through the eastern portion of the Dhurwa tract in Bastar is known as the Tulsi Dongri (3,915′), which along with other hill ranges in the centre joins towards the west with the Nandab Dongri (2,886′) and the Keshab Dongri (2,695′). Towards the north of the Darba Ghats (over which is spread the Kanger Reserve Forest) is situated the so called southern half of the north-eastern plateau of Bastar, which varies in height between 1,800′ and 2,000′, and it is from the southern slopes of the Darba Ghats that one descends by motorable road down to the southern plains of the Dhurwa tract in Bastar. This area is amply drained by the two rivers and their tributaries. The Indrawati rising from Rampur Thuamal in Orissa traverses Bastar from east to west. While a few straggling Dhurwa villages lie towards the north of the Indrawati, it is mostly to the south of this river that the main concentration of the Dhurwa is found. Before entering the Bastar district, however, the Indrawati river flows close to the water-shed which divides it from the Kolab. Taking its source from the Eastern Ghats in Orissa, the Kolab (known in the lower reaches by the name of the Sabari) flows in Bastar from north to south, forming for a long distance boundary between Madhya Pradesh and Orissa. The important tributaries of the two above mentioned rivers which drain the Dhurwa tract in Bastar are the Ganeshbahar, Goria-bahar, Kanger, Mung-bahar, Zairam (or the Baru), Bhimsen, Jagel, Urba and Miria Kuyar.

The rivers and streams traversing the whole length and breadth of the Dhurwa area in Bastar remain perennial throughout the year. Excepting the rainy season, these rivers and streams are forded in fair weather at favourable places. Ferry service is also available near such villages as Kinderwada for transporting the passengers and goods. It may be mentioned in this connection that long back it was planned to connect south Bastar with Sironcha by making the Godavari navigable. But when the political agency for Bastar was transferred from Sironcha to Raipur in 1871, this plan was dropped; instead, schemes of road construction were taken up to link north Bastar with the connecting railway stations. Thus the metalled roads were constructed to connect Jagdalpur with Raipur (1902-05) and with Sukma (1907-08). Recently, fair-weather roads have been built as the feeder roads or as links to the main metalled roads, which remain generally open throughout the year.

It may be added that long before the construction of these roads, the Dhurwa tract in Bastar was covered with two to three routes which were frequented by the Banjara traders and others. Although the ordinary traffic was much impeded by the Darba Ghats, especially in the rainy season, still the bullock carts plied on these routes, especially for carrying the important officials.

The formation of Bastar is, according to the Gazetteer of C.P. (Bastar 1909) plutonic in origin, being characterized by excessively hilly nature and great outcrops of granite rock masses. The Indrawati flowing in the Dhurwa tract passes through a clayey soil abounding with argillaceous shales ; but immediately to the south of Sitapur the hill range is entirely composed of limestone. Towards the eastern portions of the Dhurwa habitat in Bastar, laterite is found, and around the Darba Ghats mica is available. Grigson (1938 : 176) has mentioned that ' almost all parts of Bastar are full of iron ore, some of it among the finest and purest in the world.' In the area of our study, the main supply of these ' friable haematite ores ' are dug out from the shallow hill-side pits in and around Kokanar.

In the Dhurwa tract of Bastar, we find long stretches of dense forests which are rich in a variety of timber and other useful trees, e.g., teak, sal, aden, chind, sulphi, mohua, mango, kekad, kosum, sendur, sewna, bamboo, tendu, tamarind, dumar, samer, etc. Some of these forests are isolated and lie scattered, others adjoin one another, forming compact blocks. Again, while the valuable teak is found in plenty towards the southern confines of the Dhurwa habitat, in the remaining portion, there are mainly sal forests, though some contain patches of mixed forests, too. A century back, Glasford (1862) made a reference to the reckless manner in which the forests of the then state of Bastar were suffering from the wasteful methods. Later on, however, rules were made for the proper management of the forest resources. Accordingly, the forests in Bastar were classified into the Reserved, Protected (*Nistari*), minor and miscellaneous categories. The following measures, among others, were recently adopted by the Forest Administration with a view to maintaining the forests perpetually productive and useful to the people :

1 Converting as much of the miscellaneous species of less valuable trees to the more valuable teak forests,

2 Conserving rapidly the forests declared as the protected forests, and

3 Constituting the 'sal selective working circles' as well as the 'bamboo over-lapping working circles'.

These forests were once reputed to be well-filled with the game, but now their stock is much reduced. The elephants once said to be found in Bastar forests are no longer found in the wild state there. Even the bison (Gavaenus gaurus) is reported to be now rare. The *nilgai,* four-horned antelopes, *sambhar* (rusa aristotelis) and the spotted deer (axis maculatus) are still available. The other wild animals like tigers, panthers, large tiger cats, bears, wild dogs are also found in this area. Among the birds, mention may be made of the following varieties: peacock, jungle fowl, grey patridges, bush quails, including those locally known as *adar, aru, boda, cikal, ponal, kudra, mena,* etc.

So far as the climate is concerned, one comes across a sudden change of temperature as soon as one ascends the Darba Ghats from below the southern plains, inasmuch as the northern parts of the area under our study are cooler than the southern parts. This difference in the temperature is caused not only because of the elevation but also is due to the abundance of the forests. The following seasons are generally found in the Dhurwa tract of Bastar:

1 Rainy season, beginning from June-July till October,

2 Cold season, continuing from November till March, and

3 Hot season, lasting from April till the onset of the rains.

The area catches mainly the north-eastern monsoon, but the north-western winds also prevail there and cause at times heavy storms. December and January are usually the coldest months of the year, but the worst months (the so called sickly months) are found towards the beginning and the closing of the rainy season when fever accompanied by dysentery and diarrhoea take a heavy toll of people living there.

Rainfall (in millimetres and tenths) recorded at the Meteorological Station of Jagdalpur (1960) is shown below:

January	:	×	February	:	×	March	:	22·6
April	:	45·7	May	:	15·4	June	:	312·2
July	:	322·8	August	:	301·2	September	:	214·6
October	:	133·9	November	:	0·8	December	:	×

Total rainfall : 1,507·5 ; Total number of rainy days : 69

Historical and Traditional Background

The former feudatory state of Bastar, prior to its merger with the Indian Union, was ruled by the Kakatiya. This ruling dynasty of Bastar ruled from about 1050 A.D., first, as the subordinates of a Pallava King and, then, of the Chalukyas with capital established at Anam Konda (Andhra). But with the disintegration of the Chalukya empire from 1126 A.D., the Kakatiya rulers established their independent kingdom, and in 1250 A.D. they shifted their capital to Warangal (Andhra). In 1309-10, Malik Kafur, the favourite slave of Sultan Alaudin Khilji invaded Warangal, but it was left to Ulugh Khan who ascended the throne of Delhi in 1325 under the title of Sultan Muhammad Tughlak to defeat and finally capture the Kakatiya ruler, Pratap Rudra (1290-1322). With the establishment of the Muslim rule, many independent principalities came into existence ; but nothing definite is known about the Kakatiya rulers till 15th century when Ahmed Shah Bahmini (1422-36) forced Anam Deo, the Kakatiya ruler, to flee for his safety towards Bastar. After crossing the Godavari river, Raja Anam Deo entered Bhopal-patnam, whose chief had helped the Raja in battles. In Bastar which was then known as Chakrakotta, Raja Anam Deo fought against the chiefs of Bijapur, Bhairamgarh, Barsur, etc., and then marched towards Dantewara, where the tutelatory goddess said to have accompanied the Raja took her abode and since then is known as the Danteshwari Mata. The Kakatiya rulers of Bastar established their capital first at Mudhota, and then at Rajapoor, later on, it was shifted to Bastar and finally to Jagdalpur on the south of the Indrawati river.

Long before the Kakatiyas established their rule in Bastar, it is found from a number of inscriptions and copper plates that the Chhindaka Nagas had ruled from Barsur as the Kings of Chakrakotta (i.e., Bastar). One of their significant titles was 'the lord of Bhogavati, the best of cities'—Bhogavati being the mythical capital of the Nagas. The term Chhindaka which was preferred by the Nagavamsis of Bastar, is believed to be the same as the Sindas of the Kannad country (which consists at present of the northern Mysore, Bellary, Dharwar and Bijapur). The Chhindakas appear to have entered Bastar sometimes before 1023 A.D. ; they acknowledged the suzerainty of the Chalukyas, but were originally subservient to the Rashtrakutas ; and they counted the rulers of Ratnapura (South Kosala) and Udra (Orissa) as their antagonists during their rule in the Central part of Bastar (Chakrakotta) for approximately three centuries.

The Kakatiya rule in Bastar which was established by Raja Anam Deo possibly in 1450 A.D., continued for 20 generations, having lasted for more than five centuries. No important event is associated with the early Kakatiya rulers of Bastar, excepting that in the 4th generation, Raja Purshottam Deo is stated to have visited Jagnath (Puri) in Orissa and brought the chariot, while during the rule of Pratapraja Deo (7th generation) Muslim rulers from the adjoining area made an abortive raid into Bastar somewhere in 1610. It was in the 12th generation that Raja Rajpal Deo combined together the two portions of Bastar and Dongar under his rule, as these two portions were ruled separately by the senior and junior branches of the ruling family. After his death, his son, Raja Dalpat Deo, had to wrest the kingdom back from the usurper by killing him ; but due to the Marhatta invasion in 1750, under Nilu Pandit, he removed his capital to Jagdalpur. After the death of Raja Dalpat Deo, an internecine war ensued between his two sons who were related as step-brothers for the occupation of the throne which was eventually occupied by Raja Darya Deo, mainly, with the aid given by the Raja of Jeypore and the Marhatta Chief of Raipur—the latter forming part of the Bhonsla Raja of Nagpur. In recognition of this aid, Raja Darya Deo transferred the Kotpad tract in 1777 to the Raja of Jeypore and also agreed to pay an annual tribute to the Bhonsla, Raja of Nagpur. It was during the respective rules of Raja Darya Deo and his son and successor, Raja Mahipal Deo that the three zamindaris situated in the north of the Godavari river passed out of Bastar and formed part of the Hyderabad State. Raja Mahipal Deo, also, transferred in 1809 Salamigarh and other villages to the Raja of Jeypore in satisfaction of debt. His son and successor, Raja Bhupal Deo, assigned the Sihawa tract (except five villages) in 1830 to the Nagpur State in lieu of the takoli payable by him. The Nagpur authorities were frequently called to settle the quarrels arising between Raja Bhupal Deo and his brother, Lal Dalganjan Singh, acting as the Dewan of the Raja.

Raja Bhupal Deo was succeeded by his son, Raja Bhairam Deo, and it was during his rule that on the escheat of the Bhonsla Marhatta Kingdom in 1853, Bastar which had become nominally tributary of Nagpur, came into direct political relations with the British Government of India. In 1870, the zamindari of Bastar was created a feudatory state ; but soon after, in 1876, there was an armed uprising by the Muria and Bhatra insurgents against the state officials, which was brought under control by banishing certain officials. Raja Bhairam Deo was succeeded by his minor son, Raja Rudra Pratap Deo, and it was during his rule

that a serious riot broke out in 1910, which was joined by the Parjas (Dhurwas), Murias and Bhatras living in the central eastern portion of Bastar. The rising which was unexpected by the administration, began with arson, robbery and violence. Half a battalion regular Panjabi troops and a large detachment of the armed police force from outside Bastar were engaged to suppress the armed uprising. The ring leaders (including Lal Kalendra Singh, son of Lal Dalganjan Singh) were captured and banished from Bastar State. As also, some villages were burnt, a few ring leaders were hanged while the rank and file were whipped. Raja Rudra Pratap Deo was succeeded in 1921 by his daughter, Rani Prafula Kumari Devi, and it was during her rule that the hereditary title of the ruling chief of Bastar was raised in 1932 from Raja to Maharaja. When the Maharani died in 1936, her six-year old son had to wait till 1947 to be delegated full powers of administration of the State. As per the Articles of Agreement arrived at between Maharaja Pravir Chandra Bhanj Deo (who incidently is 20th in the line of Kakatiya rulers of Bastar) and the Government of India on 15.12.47, the Maharaja of Bastar agreed to transfer the administration, jurisdiction, control and authority of Bastar state to the Government of India. The result was that Bastar state, (as also other Eastern Agency States) merged with the Indian Union and was constituted, along with Kankar State, the district of Bastar in Madhya Pradesh State on 1.1.48.

The state of Bastar was divided into two divisions, viz., the Khalsa and the zamindaris for administrative purposes. The Khalsa area which consisted originally of 48 *garhs* and *talooks*, was directly administered by the ruler of Bastar through a hierarchy of officials, known as Dewan, Negi, Jogi, Saidar, Baidar, Bhandari, Lalquar, etc. The zamindaries (numbering 13) were administered by the respective zamindars, theoretically, as subordinates of the Bastar Raja. It has already been mentioned that three zamindaris situated to the north of the Godavari river had permanently passed over to the Hyderabad State, and so the remaining ten zamindaris are noted below:

Name of the Zamindari	*Caste of the Zamindar*
Bhiji	Rajput
Chintalnar	,,
Sukma	,,
Paralkot	,,
Bijapur	Telinga
Kotapalli — Paner (or — Ianier)	,,
Poteekul (or Phutkol)	,,
Kutru	Gond
Bhopal-patnam	,,
Lingagiree	,,

Since the village of our study (namely, Marenga) falls under the Sukma Zamindari, so a few words may be added about it by way of general introduction. Glasford had mentioned in 1862 that the area of the Sukma Zamindari was 480 sq. miles but Grigson (1938) has correctly put it as 650 sq. miles. The population of the zamindari increased from 40,171 in 1931 to 47,914 in 1941, while in 1958 it was stated to be 57,425. Its income, too, showed an increase from Rs 49,247 in 1931 to Rs 1,01,618 in 1941, while its *takoli* (?) payment to the Bastar state was recorded in 1941 to be Rs 7,800. Glasford (1862) had observed a century back that the people living adjacent to the Kolab river were somewhat civilized and decently clothed as compared to those living towards the north-western hilly parts of the zamindari. It may also be noted that excepting the villages comprised within the jurisdiction of the Kokanar Patwari, the Sukma Zamindari which has been constituted as the Sukma Naib-tahsil since 1951, formed a continuous territory. While in 1861-62, it contained 90 villages, in 1958 the villages included under it were recorded as 128. Previously, the Sukma Zamindari was divided for administrative purposes into four Pargana units but at present the Sukma Naib-tahsil is comprised of revenue and block development activities into ten circles.

The genealogical charts show, among other things, that the respective ruling families of the Bastar ruler and Sukma Zamindar had entered into matrimonial alliances. In this connection, it is worthwhile to point out that quite often these marriages were accompanied by the transfer of a number of villages as the "dowry areas." Thus, it so happened that the villages comprised under the Kokanar Pargana were duly transferred to the Bastar ruler by the Sukma Zamindar as the dowry area at some unknown date. Then, again, Elliot (1856) has mentioned that Hamirgarh and Chindgarh were the two Garhs (out of seven Garhs) which had been given in "mokassa" by the Bastar rulers to the Sukma zamindar at an unspecified data. These two Garhs (viz., Hamirgarh and Chindgarh) form the northern and the eastern pargana units, respectively, of the Sukma Zamindari. The oral tradition related by the Pargana Manjhi of Hamirgarh Pargana and others confirm Elliot's account to this extent that the villages grouped under the Hamirgarh Pargana formed in the long past a part of the Bastar ruler, and the villages were later on transferred to the Sukma Zamindar as the dowry area. In the light of the above facts, it may be said that the original area held by the Sukma Zamindari was probably enlarged as a result of the accretions of the dowry and/or the Mokassa villages in its fold.

So far as the early history of the Sukma Zamindari is concerned, the oral tradition mentions that in the long past the foundations of the Zamindari were laid when the petty chiefs of the different garhs were conquered by the ancestors of the present zamindar. Kedarnath Thakore has stated that the ancestors of the then Diwan of Sukma were the original zamindars of Sukma who were assigned a share of twelve paise out of a rupee in the total revenue of the zamindar. Whatever be the case in the distant past, the fact remained that the four pargana units which constituted the Sukma Zamindari were held by the respective Pargana Manjhis, whose caste-wise affiliations are noted below :

Hamirgarh Pargana having the Dhakar Manjhi
Chindgarh Pargana having the Halba Manjhi
Kerlapal Pargana having the (Bison-horn) Maria Manjhi
Korra Pargana having the (Bison-horn) Maria Manjhi

Concerning the Hamirgarh Pargana (under which Marenga village is comprised), not much is known about its early history. All that the people remember is to the effect that Hamirgarh was ruled in the distant past by a Rajput who belonged to the Hamirshai dynasty. Its chiefs were mainly engaged in fighting against the neighbouring chiefs, like Pratabgarh (perhaps a Telinga), Tirathgarh (a Dhakar), Katta-kalyan (a Telinga), Chindgarh (perhaps a Telinga), etc. As already noted, the Hamirgarh Pargana was transferred by the Bastar ruler to the Sukma zamindar. The Manjhi of this pargana (a Dhakar) resides in the village of Hamirgarh which is situated near the confluence of the Jaimer and the Baru (zairam) rivers. It is this village of Hamirgarh which is recognized as the *mul* (original ?) seat of the Hamirgarh Pargana. The following 14 villages are comprised under the Hamirgarh Pargana : Hamirgarh, Kaorakopa, Sagunghat, Leda Kakalpal, Badanpal, Chiurwada, Permaras, Tongpal, Littiras, Jaimer, Palem, Sadrapal, and Marenga.

CHAPTER THREE

THE SETTLEMENT PATTERN OF MARENGA VILLAGE

Village Sites (General)

It has already been mentioned that the physical environment of the Dhurwa tract in Bastar is largely characterized by the forest—covered hill ranges with broad and narrow valleys which are traversed by the streams and rivers. This type of ecological setting forms a distinctive feature of the settlement pattern of most of the villages inhabited by the Dhurwa in south-eastern portion of Bastar. Then, again, the fact that the Dhurwa are found to occupy a compact and continuous territory in Baster shows that they prefer to live together with or adjacent to the members belonging to their own ethnic group. Thus, the principles which seem to guide the settlement pattern of a Dhurwa village are the proximity of the forest and water resources as well as the co-residence among their own group. Such considerations as the proximity to the markets or defence requirements are given scant regard in the lay out of their villages.

Almost all the Dhurwa villages in Bastar as well as in the adjacent parts of Koraput (Orissa) are referred to by the Parji-speaking Dhurwas by distinct terms of their own, as against the official designation, as the following list shows:

Badanpal	is called	Kidia-nand
Bankpal	,,	Venuk-nand
Chandergiri	,,	Geda
Chindawada	,,	Chindura
Ellangnar	,,	Elub-nand
Ganjenar	,,	Kai-nand
Jaimer	,,	Chaimed
Kinderwada	,,	Tinar-nand
Kodripal	,,	Kotro-palli
Leda	,,	Nera
Littiras	,,	Nand-racha
Ludkiras	,,	Titar-racha
Marenga	,,	Marang
Marjum	,,	Marjung
Tahakwada	,,	Tawa-nand
Puspal	,,	Pus-palli
Murepal	,,	Muruwa
Mohpaddar (Orissa)	,,	Badia-palli
Rengawada (,,)	,,	Boda-guda
Kosra-bhatta (,,)	,,	Koila-guda

While it was not possible for our informants to state clearly whether the various terms used in the above list to designate the

village settlements (e.g., palli, racha, nand and guda) which are regarded officially as the land revenue units, stood originally for a cluster of the village settlements or merely designated a segment in a village. But apparently the names of some, if not all, the villages are associated with their characteristic features, e.g., Elub-nand (Ellangnar) is so called because of the white ants (*elub*), nand-racha (littiras) due to the abundance of jaman (*nand*), Marang (Marenga) on account of the large number of trees (*meri*), etc.

Mention may be made that previously due to the exhorbitant levies of the forced labour (begar) and other vexatious demands made by the petty (state) officials (Grigson, 1938 : 14), many villages on the road side were abandoned. But, later on, thanks to the efforts of the well-meaning officials, some of the villagers were persuaded to settle in their abandoned villages ; even some new villages were established. In the Dhurwa tract of Bastar, there are a number of villages on the main metalled motorable road passing southwards from Jagdalpur, namely, Darba, Kokanar and Sukma, which lie after every 22 miles, while on descending nearly 1,200′ down from Darba, the motorable road leads to another developing village of Tongpal which lies at a distance of 13 miles south of Darba and 9 miles north of Kokanar. This road side village of Tongpal lying close to the perennial stream of the Baru (or zairam) is situated at a height of 865′ from the mean sea level.

The Village of Marenga

Opposite to the road side village of Tongpal, across the Baru stream, the village of Marenga lies sprawling on the foot-hills of the Dangar Candi, being approached from the road side village of Tongpal by means of a foot-tract which passes first through the scrub jungle, and then one has to wade through the Baru stream (pared) which remains excepting the rainy season ankle-deep. No bridge or culvert has been built over it, neither does a bullock cart ply across it. On the east of the Marenga village, the Baru stream flows, but it does not limit its eastern boundary ; instead, the village limits extend beyond the stream. For that matter, the Baru stream during its southward course winds through the villages of Tahakwada, Tongpal, Marenga and Littiras in a zigzag course without making any natural boundary between any of these villages. The western limits of the village of Marenga are, however, marked by the hill crests of the Dangar Candi (2,247′ in height). In fact, the same foot-tract that takes one from Tongpal to the village of Marenga leads further on towards the west through narrow and

slippery forest tracts for about three miles over the Koppa Candi and the Bartu Candi—both these hills being collectively referred to by the name of the Dangar Candi. During the ascent of about 1,300′ from the Marenga village proper, one comes across heaps of stories (*kel kuda*), and on reaching the hill top of the Dangar Candi, the first village to be met with is Marjum which marks the westernmost extension of the Dhurwa tract in this particular area. Almost continuous with the Dangar Candi runs in the northern direction the Dondar Konta at the foot-hills of which lie such (Dhurwa) villages as Tahakwada and (the recently settled forest village of) Juna Pani. No natural marks divide the village of Marenga from such neighbouring villages of Tahakwada, Tongpal and Littiras, which lie, in the respective orders, on the north, east and south of the Marenga village. The result is that the cultivated fields and other types of land belonging to the village of Marenga coalesce into those belonging to other villages which surround the village of Marenga from all sides except, the west, where the Dangar Candi hill separates it from Marjum village.

The Area of the Village

According to the revenue records, the total area of the Marenga village in 1956-57 was 965.99 acres. But in view of the fact that it is a " Nusahati " village (i.e., where only the " inexact survey " has been done), the village under our study is not a clearly demarcated unit, and, as will be explained later on the figures supplied by the concerned Patwari may be taken at best as the rough approximations. On the basis of these approximate figures, the forest land which refers to all the actually wooded area of the village, nearly occupies onefourth of the total area of the village. The wooded area of the village which includes ' the big tree forest ' and ' the scrub jungle ' is estimated to cover as much as 234.85 acres. Out of this, the big tree forest, comprising an area of 150 acres occupies almost the whole of the eastern portion of the Dangar Candi hill, which has been declared as the Nistari (Protected) Forest, though the contiguous wooded area bordering on the villages of Littiras and Jaimer are declared as the Reserve Forest. In accordance with the forest management policy, the requirements of the forest products for the *bona fide* domestic and agricultural purposes by the villagers of Marenga, and other villages are met with from the Nistari Forest, though efforts of the forest officials to check the over exploitation by way of wasteful uses, etc., are resented by the villagers. Recently, a limited area under the Nistari Forest has been released by the Forest Department for being converted as the agricultural fields. The scrub jungle, consisting of 84.83 acres in the

village, mostly lies interspersed with cultivated fields, being administered by the revenue officials. These are capable of producing small timber and fire wood, as also provide the grazing facilities to the villagers. In addition to the wooded area, there exists in the village a type of land which is mentioned in the revenue records as 'the permanent pastures and other grazing land'. Its area is estimated to be 17.43 acres and includes the fallow land of more than five years standing if it is reserved for grazing or raising of grass. Furthermore, an area consisting of 22.73 acres in the village is described as (a) barren and unculturable (including land under heaps of rocks or covered with silts brought by the Baru river and other euphermal hill streams), (b) the culturable waste land (including the land available for cultivation but not classified under the cultivated or fallow land), and (c) the land put to non-agricultural uses, e.g., burial grounds, shrines, roads, etc.

The respective figures of the above-mentioned categories of the land in the village of Marenga may be summarized as follows :

Forest lands		
Big tree forests	150·00 acres	
Scrub jungles	84·85 ,,	234·85 acres
Permanent pastures and other grazing lands		17·43 ,,
Miscellaneous types of lands		
Barren and unculturable	0·44 ,,	
Culturable waste	17·36 ,,	
Burial grounds, shrines, etc.	4·93 ,,	22·73 ,,
Land under cultivation (including fallow land)		690·98 ,,
Total Area of the Village		965·99 ,,

Habitation Areas in the Village

As already mentioned, the village of Marenga which extends eastward beyond the Baru stream rises gradually towards the west till the foot-hill of the Dangar Candi is reached, while the cultivated area of the village surrounding the habitation clusters spread in an undulating manner towards north and south till these intermingle with the cultivated fields belonging to the neighbouring villages of Tahakwada and Littiras. The habitation areas which are locally called the *para*, lie dispersed and are found to be situated generally on higher levels of ground in the midst of the groves of fruit trees and patches of scrub jungles, remaining almost half hidden under the thick foliages of trees. Traditionally, the village of Marenga consists of only two paras, namely, the Tippin Pal and the Marenga village proper—the latter having three extensions spread in different directions, being called respectively, Kana, Patel

and Rawat. But since all these (five) hamlets have distinct names of their own and are recognized as the discrete units by the villagers, so we may individually mention them, as also note the number of households (and persons) belonging to different ethnic groups living in these five discontinuous paras of the Marenga village, as found during our census work in February, 1958.

Name of the Para	Dhurwa	Rawat	Mahara	Bhatra	Maria	Lohar	Total
Kana	5(24)	—	—	2(11)	—	—	7(35)
Patel	4(19)	—	2(12)	—	—	2(12)	8(43)
Dhurwa	50(263)	8(32)	—	1(1)	2(14)	—	61(310)
Rawat	4(24)	6(29)	—	—	—	—	10(53)
Tippin Pal	31(169)	3(12)	1(3)	—	—	—	35(184)
Total	94(499)	17(73)	3(15)	3(12)	2(14)	2(12)	121(625)

It is obvious from the above mentioned list of the hamlets of the village under our study that Dhurwa para and Rawat para are known by the particular ethnic groups living in the respective paras, Patel para is associated with the present village official namely, the Patel who has his house there, Kana para is believed to have been connected in the long past with a (prominent ?) Dhurwa whose name was Kana and was living there ; but no explanation has been given with regard to Tippan para which is called by the Parji-speaking Dhurwas by the name of Tippin Pal, while others designate it as the Tikkin Pal. The above table also shows that the Dhurwa are settled in all the five paras of the village, Rawat, in three paras, the Mahar and the Bhatra in two paras, the (Bison-horn) Marias and the Maria Lohars in only one, though in different hamlets. It may be added that the members belonging to the Dhurwa, Rawat and Bhatra ethnic groups are found to live side by side with one another in different paras of the village, but the houses belonging to the Maria Lohar and the Mahar (excepting the only land-owning Mahar householder) are found to be situated at such a distance from their Dhurwa neighbours that their area of habitation may be said to form a separate sub-area for the habitation purposes within the same hamlet (viz., Patel Para).

The Five Hamlets of the Village

On taking the five hamlets of the village of Marenga one by one, we find that Kana Para which is separated from other habitation areas of the village by the Baru stream lies so close to the road side village of Tongpal that it is difficult to know amidst the surrounding scrub jungles and the outlying cultivated fields as to where the confines of Tongpal end and those of the Marenga village

start. The householders settled in Kana Para get adequate water facilities from the nearby perennial stream of the Baru. The habitation area of Kana Para lies at a small distance from the main thoroughfare that connects Tongpal with the main settlement of the Marenga village. A side tract near the stream bank leads towards the cluster of houses in Kana Para. The houses though widely spaced from one another are aligned along the foot-tract which leads further on to other neighbouring villages. The second hamlet, namely, Patel Para, is perched on a slightly higher upland and lies towards the north of Kana Para, away from the edges of the banks of the Baru stream. An indistinct foot path radiating from the main thoroughfare of the village leads through the scrub jungles over the field embankments to the habitation area of the Patel Para. Proximity to the water source as provided by the Baru stream in the immediate neighbourhood of the kitchen gardens (Attar or Launka) is mainly responsible for the recent settlement of the people in the hamlet. Sometime back, Patel Para was known as the Chamru Para—Chamru being the father of the present Patel of the village, who was the first to reside in this hamlet. Even now, the eastern portion of Patel Para is occupied by the Patel of the village and his kins related to him by blood or marriage, while the Maria Lohar and the Mahara households constitute (as already pointed out) a separate sub-area towards the western portion of the hamlet. The houses in the western portion are built more or less compact to one another, almost lineally, on one side of the narrow side street, while the house in the eastern portion are generally isolated from one another, being connected by blind lanes.

Judging in terms of the territorial spread and the number of households (or persons), Dhurwa Para may be counted as the most important habitation area of the village under our study. It is situated at a higher level than Kana and Patel Paras, while the main thoroughfare (*pav*) which gradually rises through the narrow bunds of the rice fields bifurcates in two streets—each of them radiating further into a number of lanes and bye-lanes ; but further on, these streets join together and lead onwards to the foothill of the Dangar Candi. It is in that para that the largest concentration of the Dhurwa population of the village is found ; so also has the village priest (Pelac) built his house there, while close-by there is the Thana Gudi which serves as the village rest house for the government servants and other travellers visiting the village. As will be shown later on, two to three shrines are situated within the confines of its habitation area. The houses are found there scattered either singly or in groups, each within its own covered

compounds, being connected by internal streets and narrow lanes. Regarding the caste-wise distribution of the households in the Dhurwa Para, it may be remarked that though the two (Bison-horn) Marias have built their houses in the midst of the Dhurwa population, still the fact remains that their respective houses are built at extreme ends of the village street, while most of the Rawat houses are found to be built more or less grouped together. It has also been observed that the some of the householders who are related to one another patrilineally build their separate dwelling houses (*ole*) close to one another, round an open or fenced in kitchen garden (*bari*).

Rawat Para which is situated on the upper reaches of the village lies towards the north-west of Dhurwa Para. A decade back, Rawat Para was exclusively inhabitated by the Rawat, but now a few Dhurwas have built their houses in the hamlet too. While the Rawat houses (along with a solitary Dhurwa house) are arranged round an open space in a compact form, the Dhurwa householders related to one another by ties of blood have built their houses close to one another but in separate enclosures, facing the main thoroughfare that leads further on to Marjum village as well as to Tippin Pal Para. The householders living in Rawat Para, as also those inhabiting the western half of Dhurwa Para, make use of a common water source (*chuan*) which consists of an open pit nearly 3′ in depth land lies towards the south of Rawat Para ; the rest of the householders of Dhurwa Para take their drinking water from another chuan which lies close to the northern limits of their hamlet, though a few householders find it more convenient to fetch water from the Baru stream which is comparatively far away than the aforesaid wells. It may be remarked in this connection that the Mahar and the Maria Lohar are the only ethnic groups living in the village of Marenga whose touch is supposed to pollute the water in the chuan, and (as already pointed out) their houses are built in Patel Para very close to the Baru stream. The Tippin (or Tikkin) Pal Para which lies close to the neighbouring village of Tahakwada, is connected by means of various foot tracks with other hamlets of the Marenga village, while the thoroughfare crossing the Tippin Pal Para in the east west direction starts from the road side village of Tongpal and after crossing through the Baru stream reaches beyond Tippin Pal Para westwards to the (Dhurwa) villages of Marjum and Bankpal. The widely spaced houses in the hamlet in question are arranged mainly on both sides of the winding thoroughfare, but some houses are also found to be built on the narrow lanes that branch out from the thoroughfare crossing the hamlet. No caste-

wise distinctions are maintained in the arrangement of the houses in the para, for, the Rawat and the (solitary) Mahara householders of the hamlet have built their houses side by side along with the Dhurwa householders. The perennial chuan lying in the foot-hill of the Dangar Candi provides the main source of water to the inhabitants of the hamlet, while another well lying in the cultivated fields is reported to dry up during the hot summer days, but so long as the water remains inside the well, the solitary Mahara householder makes use of it, while during the summer its members procure water from the Baru stream which is situated at a long distance from the house.

In the light of what has been mentioned above, it follows that the village of Marenga, while being represented by a single Patel (headman), is spatially divided into five scattered hamlets (para), each having a distinct name and definite habitation area within its fold. But the people living in the village recognize both in their day-to-day life as well as on certain ceremonial occasions the two main sub-divisions of the village, namely, (a) Dhurwa Para surrounded by three small settlements of Kana, Patel and Rawat (collectively referred as the Marenga proper) and (b) Tippin Pal racha (para). Not only are two separate shrines (viz., the Muttak Gudi and Hinglajin Mata Gudi) associated with the respective sub-divisions of the village, (namely the Marenga proper and Tippin Pal racha), but also the places of origin attributed to the original (Dhurwa) settlers in the two sub-divisions of the village are different, namely, the "cave" near the Dangar Candi foot-hill and the "well" near the river bank of the Baru. Even the burial grounds are traditionally marked separately for these two main sub-divisions of the village, though at present there is some sort of looseness in the use of the burial sites. The upshot of the whole matter is that on excluding the non-Dhurwa ethnic groups and the so called affinal Dhurwas of the village, the Dhurwa population of the village of Marenga is differentiated in terms of the Marenkherias and the Tippin Palias. It may be pointed out in this connection that a number of the Marenkheria householders have built their houses in the Tippin Pal racha, but the Tippin Palias, being a numerically smaller group, continue to live exclusively in their own *racha* (para).

It is reported that there are various old settlement sites scattered generally on the higher levels of the village, e.g., Dora Padar, Gudi Padar, Chaika Padar and the Makdi Padar. While most of these Padars have been abandoned, a few (like Gudi and Makdi) continue to be inhabitated. Even at present new houses were being

built every now and then at the various old and new habitation areas of the village. For instance, during the period of our study in the Marenga village (1958-60), we noted that as many as fourteen new houses were built by the respective householders either adjacent to their old house sites or far away from their last occupied paras. In addition, three householders settled in the village (and noted as such by us during our census work in February/March, 1958) broke down their houses and left the village for good. These frequent population shifts necessarily change the residential pattern of the village, and there are a number of cases to show that such shifts took place before 1958 also. Thus it may be said that the settlement pattern of the village of Marenga is far from stable over any length of time. It may be added in this context that the main thoroughfare connecting Jagdalpur with Sukma, before the main metalled road was constructed in 1907-08, passed over the Darba Ghats through the Marenga village. This thoroughfare which was traversed by the bullock carts lay towards the west of the Baru stream, and the route lay *via* Tahakwada, Marenga, Littiras and Hamirgarh. At present, however, the main motorable road connecting Jagdalpur with Sukma passes towards the east of the Baru stream. When the cart road passed through the village of Marenga, the travellers used to halt for the night in the village which was also provided them with a distillery (*bhatti*).

Burial Grounds

With regard to the burial grounds (*cankul*) in the village it may be stated that there are not less than nine scattered burial grounds ; some of these are spread over a large area while others occupy small portion of land. Each burial ground, however, contains a series of irregularly arranged graves, covered with debris and a few broken articles used by the deceased in his lifetime, like an earthen pot, bamboo basket, etc. Most of these burial grounds are situated in the midst of the thick scrub jungles or barren land, while a few lie in the open ground, surrounded by the cultivated fields. The Dhurwa living in the village of Marenga have three dispersed burial grounds : one is near the Baru stream, the other lies adjacent to it towards its west, and the third is situated towards the north of the Tippin Pal Para. The Kallars and the Mahars have two each separate burial grounds (*murda ghat*), while the Rawat and the Maria Lohar possess one each of these burial grounds. Thus, excepting the Bhattra and the Maria, the burial grounds in the village of Maranga are meant for the exclusive use of the definite ethnic groups living in the village. It was explained that in case any of these or other ethnic groups

settled in the village would require the burial ground in the village for their (dead) members, then the "permission" of the village Pelac is sought, when a portion of the barren, uncultivated land in the village is allotted for the purpose of burying their dead. Yet another important fact to be noted in this context is that the Dhurwa burial grounds are specifically marked on the basis of Jama affiliation. Thus, those belonging to the Pelac Jama would be buried in the portion of the burial ground which has been allotted to the particular Jama (kin groups), etc., etc. The members regarded as the 'affines' too have their well-marked portions in the common (Dhurwa) burial ground of the village. The burial grounds belonging to the Kallar and Mahara ethnic groups, also, are divided on the basis of the lineage groups found among them, but it is not so consistently followed as the case among the Dhurwa. Another significant fact worthwhile to mention here is that no burial ground is situated near the foot-hill of the Dangar Candi, but all lie scattered towards the east and north of the village, more or less close to the Baru stream.

The Shrines

The village shrines, in contrast to the burial grounds, are located near the foot-hill of the Dangar Candi, in the habitation areas of the village, even in the midst of the scrub jungles and the cultivated fields. Again, unlike the burial grounds, no caste group residing in the village has got its own specific shrine in the village, inasmuch as the respective priests and mediums attached to the commonly worshipped shrines belong to the Dhurwa community of the village. The important shrine which ties the village of Marenga to its three neighbouring (Dhurwa) villages of Tongpal, Littiras and Permaras, is known in the name of the Bhandarin Mata which lies outside the village of Marenga within the confines of Tongpal village. The consort (?) of the Bhandarin Mata, popularly known as 'the old man' (*muttak*), has a separate shrine of its own. It is built at a distance of about onefourth furlong from the Bhandarin Mata Gudi and lies within Kana Para of the village. This shrine which is worshipped on ceremonial occasions by the people living in the Marenga proper lies in an open ground. The Tippin Palias living in Tippin Pal Para, however, offer their worship separately in a different shrine, called the Hinglajin Mata Gudi. This shrine is situated near the habitation area of the Tippin Pal Para and is surrounded like other shrines by a large number of trees. Quite adjacent to this shrine is a small hut which is called the Matichi, where the Tippin Palias prepare the ceremonial meals for their own consumption after the

worship of Hinglajin Mata is over. It may be mentioned that in Makdi Padar there is an open ground by the side of the Baru stream, where an earthen seat is arranged for the Muttak and where the Marenkherias assemble to perform the rituals as well as prepare their ceremonial meals on certain occasions. The rest of the shrines in the village are associated with a number of the patrilineal kin-groups of the Dhurwa living in the Marenga village. Thus, the Neutak Jama are associated with three shrines, namely, the Ladri Mata, Jalni Mata and Telingin Mata *alias* Jalni Mata. While the Ladri Mata shrine is the oldest of these shrines, being built in the open fields under the bamboo and sewna trees and fitted with a swing, the other two shrines have come into being within the last 12—15 years—one of these without any fencing is situated within the habitation area of the Dhurwa Para, close to the dwelling house of its priest, and the other lies in the open ground and is properly fenced. The Kicek Jama too have a shrine of their own in the village, known as the Jalni Mata shrine. It is properly fenced and lies in the outlying fields near about the Dangar Candi foot-hill, being surrounded by such trees as the mango, pikad, samer, jam, etc. The Borka Jama and the Dora Jama have also got their respective shrines which are known by a common name, namely, the Dongri Gudi or Dongar Dei Gudi : While the shrine associated with the Borka Jama is not provided with any fencing and lies in the open ground on the Dangar Candi foot-hill in the midst of the Nistari Forest. The shrine associated with the Dora Jama is a two-sloped hut built on the outskirts of the habitation area of the Dhurwa Para. Yet another shrine is found in the village, which is associated with those Dhurwa consanguines who hailed from Mauripal village nearly two generation back and is called the Lelle Murtaal Gudi by its priest but others refer it as the Pardesin Mata. It is built under the mahua tree and is properly fenced, being situated within the habitation area of the Dhurwa Para, quite adjacent to the dwelling house of the priest. There are two more shrines in the village, which are connected with the two long-settled lineage groups referred commonly as the affinal group. The one is called the Bhairam Deo Gudi which is properly fenced but lies in the barren, uncultivated land, while the other shrine is known as the Dular Dei Gudi which lies half way between Tippin Pal Para and Rawat Para. Last of all, mention may be made of the shrine called the Maoli Mata Gudi which is fitted also with a swing, being attended to by a Dhurwa priest from Tongpal village. It is built under the mango trees, but the Dhurwa of the Marenga village do not seem to attach much importance to it.

Open Places, Drainage, Water Supply, Etc.

In almost all the hamlets of the village of Marenga, there are a number of levelled open places which are vacant and unused, being mostly found in and around the various household clusters. These open places are used on such occasions as marriages and death anniversaries and sometimes as the threshing floors too. These are generally kept clean and are normally not used for defacation. One of these open places lying in Dhurwa Para near Thana Gudi is used at present as the dancing ground for the whole village of Marenga. Another open place is situated in the neighbourhood of the Rawat households in Dhurwa Para of the village. It is called the Gai Gothan, because the cattle of the village are assembled there by the respective cowherds to take rest during the hot days under the spreading trees. Unlike the dancing ground, the Gai Gothan is seldom swept, excepting on the festival of Laundel (Diari). These open places in the village are generally free from the weeds or tree stumps, being surrounded by useful fruit-bearing and other trees. Occasionally, these are even smeared with cow-dung paste water by the children and/or the womenfolk belonging to the respective householders living close-by, thereby giving a neat and clean look to the village as a whole.

So far as the drainage of the village is concerned, it may be pointed out that the village of Marenga slopes down towards the south-east direction. During the rainy reason, the innumberable water channels rushing down from the Dangar Candi hill empty their waters in the perennial stream of the Baru Nadi. These water channels meander through the undulating cultivated fields surrounding the raised habitation areas of the village. Occasionally, the narrow lanes connecting the widely spaced houses in the different paras of the village become the water channels, carrying the dirty water and spreading mud inside the village proper. These water channels passing through the cultivated fields and/or by the sides of the habitation areas of the village during the rainy season are also used by the villagers for purposes of bathing and washing the clothes, and even for drinking as well, if only because the chuan (open wells) lying in the open fields are affected by the flowing water of these water channels during their course through the rice fields.

Regarding the water sources, it may be mentioned that over and above the perennial stream of the Baru which winds through the south-eastern portion of the village of Marenga in a zigzag course, there are two to three wells in the whole village whose

water does not dry up during the hot summer days. The remaining wells dry up completely by April/May, thereby causing great inconvenience to the villagers. It may be remarked in this connection that all these wells in the village are without any lining or cover and are situated mostly in the cultivated fields or barren land. The drinking water from these wells is removed by the villagers by putting the water vessels inside the wells. With the onset of summer (when the water inside the wells starts to dry up), the person pours drinking water slowly inside the vessel by means of hands or a small sized vessel. The drinking water provided by the Baru stream is not taken directly from the stream, but by making a hole in the sandy bank of the Baru till the water slowly emerges from these water holes, when this sort of filtered water is stored in the water vessels.

CHAPTER FOUR

MATERIAL POSSESSIONS

Habitation

A domicile in the village of our study consists essentially of the principal dwelling house (*ole*) and (in most case) the attached permanent hut (*char*). These two separately built constructions are surrounded by bamboo fencing with the result that a closed courtyard (*veli*) is formed. Those owning goats and pigeons prepare separate sheds on the raised platforms within the enclosed courtyard towards the far end. The pig sty, on the other hand, is invariably built outside the courtyard, though within the easy reach of the concerned householders. The cattle, too, are tethered in the open ground outside the courtyard.

The utensils are generally cleaned by the womenfolk of the house in a corner of the covered courtyard, but a few householders were noted to have erected a platform about 3′ in height over which the earthen pitchers containing water for daily use was kept, while the dirty water would pass outside through a drain made underneath the platform. During the cold nights, fuel is kept burning inside the courtyard in an open place where the inmates of the house and other friends warm themselves. Sometimes, meals are taken in the couryard, and at other times people have been found to sleep in the open courtyard on the bamboo mats. Such outdoor work as the basket making (by the menfolk) and the preparation of the leaf-cups (by the womenfolk) are often carried out in the courtyard. For that matter, men and women sit in the winter and bask in the sunshine. The open space of the courtyard in front of the ole and char sometimes is nearby 6′ and is properly enclosed by means of bamboo fencing (*bari*) which reaches to a height of about 4′. A gap is left almost in the middle of the fencing, where a rectangular frame of bamboo door is fixed. A forked stick is placed as a support to hold it in position from outside whenever it is closed. It was observed that a few Dhurwa householders have planted *gandia* flowers in their courtyards, while others have grown the fruit shrubs of kamla inside their veli. Significantly enough, no *tulsi* (basil) plant has been fixed by any householder in the Marenga village ; but such cases are not wanting in the neighbouring villages of Tongpal and Leda where some Dhurwa householders have arranged tulsi plants on the

raised earthen platforms inside their closed courtyards. It may be added that almost every week (as also on certain festivals) the womenfolk besmear the courtyards as well as the floors of their houses with a thin paste of cow-dung mixed with the red earth (*nod tam*) and diluted in water after sweeping the same with broom sticks (*auk*). The rubbish is collected in worn out bamboo baskets and thrown outside the courtyard in a rubbish heap. Reference may be made in this connection that in almost all the Dhurwa houses of the village under our study, a special hearth is made just outside the enclosed courtyard. Water mixed with the ashes is kept inside the earthen vessel and allowed to boil on this hearth which consists of three to four conical stones. All the dirty clothings of the inmates of the house are put inside this vessel, and after boiling these clothings in the hot water, the womenfolk wash them near the stream bank by striking on the flat stones.

With regard to the hut locally called char, it has been found that it provides additional living space to nearly 60 per cent of the householders in the village of Marenga—a few of them owned double chars while one of them has as many as three such huts. The ground plan of a char is rectangular in shape and varies in length and breadth according to the requirements of the householder in question. It has uniformly two-sloped roof which is covered with thatched grass, being closed with bamboo matting walls. Generally, the char is a single roomed tenement, though there are a few cases where a single char was partitioned to accommodate a recently married son. It has been found that while the char is rarely constructed towards the north of the main dwelling house, some build it away from the ole at a distance varying from 3′ to 5′, yet others prefer to build it so close to the ole that the over-hanging caves of the two roofs appear to be almost common —only the common wall dividing these two separately constructed dwelling house and the hut. It may be added that some chars, (especially those which are combined with the ole) accommodate the husking levers (*dehki*), while others contain mortar holes (*chanwill*). The grinding stones (*jata*) are kept on one side of the char, so also are kept there the folded bamboo mats or the wooden seats or the wooden cot (*khat*) woven in sergi fibres. Another function that a char serves is that it provides shelter to the guests, especially the affinal kins (*saga*) who are expected every now and then. Not only they are entertained there with intoxicating drinks and specially prepared meals but also they pass their night in the char. On ordinary occasions, too, the inmates belonging to the house take their meals inside the char. Quite often, very old

persons belonging to either sex make it more or less their permanent abode.

The principal dwelling house (called by the Parji-speaking Dhurwas ole) generally consists of a closed veranda (*baunti*) and two inner rooms (*bakra* and *bacha*). The entrance to the main dwelling house is through a bamboo wicker-work door (*paw*) that is fixed in the middle or on the sides of a closed veranda, whichever side the entrance to the ole lies (though the general practice in the village is not to have the entrance made from the north) the fact remains that the entrance leads one inside the veranda, but in some cases it opens directly inside the inner room called the bakra. It may be mentioned that out of 72 dwelling houses measured by us there were 12 houses which were not provided with any veranda at all. While each of the dwelling house, as also, the char has a rectangular ground plan, being constructed lengthwise in the direction of east-west, seldom are the verandas built breadthwise of the ole. Then, again, there are some verandas which are provided with a raised floor, 6″ to 9″ higher than the level of the courtyard, almost on the same level as or even higher than the interior of the house, a few bauntis have the raised floor raised on the right and left sides of the entrance door, thereby leaving the passage from the entrance door to the inner room on the ground level. The floors of most of the verandas are found to be sunk with two to three holes which are used as the mortars (*kutni*) where the womenfolk pound the grain by means of the metal-tipped wooden (*sergi*) pestles (*chowkal*). A few verandas contain improvised hearths (*chaundgel*) where sometimes the cooking is done by the womenfolk. The stock of fuel (*kadacil*) is kept there ; so also, the bamboo slivers, rain hats (*karij*), axes, bows and arrows are struck from the notches in the walls or from the ceiling of the houses. Sometimes fire is burnt in the veranda during the cold nights of the year for the warmth and light. Meals are also taken there by the inmates of the house, as also, sleep there during the summer nights. A veranda is frequently plastered with earth mixed with cow-dung paste, thereby giving generally a neat and clean look.

The entrance from the baunti to the inner room called the bakra is usually through a bamboo wicker-work door, but some of the houses are provided with a two-leavened wooden door fixed on a peg and socket within a wooden frame, being fastened by means of chain and padlock. The bakra which contains larger floor space than the adjacent room called the bacha, is enclosed (along with bacha) by bamboo walls plastered with thick layers

of earth both from the inside as well as from outside. Neither the bakra nor the bacha is provided with any window, so it is trough the open door-way that the light enters inside the rooms. The bakra is generally used for the purpose of sleeping at night as well as for cooking. In one corner of the bakra is made a hearth (*chaundgel*) which consists, in a large number of cases, of three conical stones smeared with earth, but some of the houses are provided with horse-shoe shaped hearths with one to two openings. A number of metal and earthen pitchers and vessels, bamboo baskets of various shapes and sizes, containing different articles, are also found spread on the floor of the room, while some of the gourd vessels, clothings, etc., are hung from the rafters and bamboo walls. Since no outlet is made for the smoke to escape, so when the smoke from the hearth-fire slowly moves outside through the chinks between the walls and the roofs or from the door-way, everything inside the room is coated with a thick layer of soot—even the rafters are blackened. While in some Dhurwa houses, a wooden or bamboo door leads from the bakra to the adjacent inner room called the bacha, other householders completely partition the two inner rooms by means of bamboo matting, providing separate entrance to the two adjacent rooms from the veranda, yet a few keep a gap in the bamboo wall dividing the two rooms, being open at the far end of the room. In any case, it is the smaller of these two inner rooms and is uniformally used for storing the foodgrains like paddy and kutki, pulses and tobacco leaves tied in bundles, etc. The normal method for storing the foodgrains is to keep them in a large bamboo grain bins which are plastered with cow-dung. These grain bins are arranged in rows on a bamboo or wooden platform (*atu*), being built on wooden posts. While the atu usually occupies two-thirds portion of the floor space of the bacha, the remaining unoccupied space of the store room is used on those occasions when the offerings are made to their ancestors on death anniversaries. It is a taboo for a Dhurwa woman to climb these platforms ; neither can any person sleep in the bacha, nor can anybody eat or cook the meals there. It may be added that there are a few houses which are fitted with a loft (attic) for the space immediately under the roof of most of the houses is provided with a ceiling of horizontally laid bamboo matting or wooden planks.

The Dhurwa of the Marenga village do not consider any particular day as the auspicious one for constructing a new house ; neither do they consult any *panchang* (almanac) or the Brahmin, as is the case with the Dhurwa and other caste groups living in the surrounding villages. Of course, no house can be built in the

whole village on such occasions as the ceremonial rice seed sowing ceremony, Diari (Laundel), etc. Further, no house warming ceremony takes place among them, though a few of them avoid entering in a newly constructed house on Tuesdays and Saturdays. It may be added that excepting the recent innovations, all the houses and huts in the village of Marenga are two-sloped (*dandi-ole*). Generally, a new house is built by a Dhurwa after he is free from the harvesting and threshing of the paddy, etc., and the normal months for construction of the houses in the village are from Magh to Chaitra (i.e., February to April). As soon as the house site is selected by a particular householder on a fairly level ground in the elevated area of the village, the central post (*modu petti*) is fixed long before the actual construction of the house starts. The search is made for the straight and upright branches of trees (e.g., bija, mohua, sewna, tenwas, kosum, etc.) in the Nistari Forest, although quite often the wooden posts and beams which remain in good condition in the old broken house are also used for constructing a new house in the same hamlet village. The trees marked suitable for posts and beams in the Nistari Forest are cut and trimmed on the spot and brought home either singly or altogether in combined labour parties. In fact, the collection and carrying over of these roughly fashioned upright posts and beams take a long time. However, long after the central post is fixed, a number of the vertical posts (*sankul*) are driven in the holes made nearly 2′ deep in the ground. These posts of similar heights are arranged in rows of equal distance, both length-wise and breadth-wise and are forked at the top to carry and support the side beams —the last beams forming the roof edges. Above the side beams are set cross-wise the transverse beams at right angles to the side beams, and on the two extreme transverse (or cross) beams, lying at either end, are fixed two vertical posts, upon which directly rest the full length of the ridge pole. It is above the side and cross beams that the sliced bamboo rafters radiate on all sides, thereby comprising the framework of the roof.

The floors inside the two-sloped houses are raised usually 6″ from the general level of the street or the fenced-in gardens (bari) lying in between the isolated and detached houses of the village, although such cases are not wanting where the houses are provided with plinths reaching the height of 1′ to 6″. It is against the edges of the raised floors of the houses that bamboo wicker-work walls are set up. Both the side walls and the partition walls are made so high as to almost reach the roof of the houses—the side walls being well protected from the rains and sun by the overhanging caves. While there are some side walls which are made

of small twigs of trees (*ordi* or *nodel*), a few houses are provided with wooden logs which are arranged horizontally between the vertical posts. In many houses, an open space is kept between the front wall and the roof so that the light and air may enter as also the smoke may escape outside. Most of these walls are plastered on both sides with layers of earth, several inches deep, which are occasionally besmeared with an ochre-coloured clay procured from the Nistari Forest. After the wooden upright posts are driven in the holes, and the beams are fixed upon these posts, the side- and partition-walls are made by the menfolk, while the womenfolk plaster these walls with thick layers of mud ; the framework of the roof is then made and covered with thatched grass by the menfolk. When the house construction is complete, the inside floor of the inner rooms as well as the veranda is made by means of the hard stamped clay by both the sexes. It may be added that no decoration is normally made in any part of the house, neither are windows ordinarily provided in the houses of the village.

Prior to our first trip to the Marenga village (January-March, 1958), there were two dwelling houses (ole) and one char, which were tiled roofed. The rest of all the permanent houses and huts in the village were thatched roofed. The thatched grass (*shukla*) though mainly procured from a distance of three to four miles from the village was also grown in those fallow lands which were not sown with any crop for one to five years (*purani pidti*). The shukla grass which is first trimmed evenly in order to make a level edge, is spread in bundles over the rafters of the roofs in the successive layers and tied with bamboo splints—work commencing from the lower sections of the roof until the edge is reached. It was reported that the thatched grass on the roofs of the houses gets untidy after about two years when it is required to be renewed. Concerning the three tiled roofed constructions in the village, it may be mentioned that all the respective ole and char belonged to the Dhurwa householders of the Marenga village, being constructed in 1955-56. The required tiles (*khapra*) which are first sun dried and later on burnt in the open kilns, were prepared by a Bhatra who had recently settled in the village of our study. The cost of the tiles was Rs 5 for every 1,000 tiles, and the total number of tiles required for the ole ranged from 12,000 to 14,000, while for the char 4,000 tiles were required by the respective householder. It is worthwhile to mention that during the period of our stay in the village (viz., from 1958 to 1960), six more householders had already got the roofs of their dwelling houses covered with tiles through the same bhatra tile maker. Towards the close of 1960, a Kallar from Ludkiras village was

found preparing the tiles within the precincts of the Marenga village ; so also were a number of Marenkheria Dhurwas engaged in making the tiles for their houses on the mutual exchange basis.

So far as other recent innovations are concerned, it may be stated that towards the late 1958, the four-sloped tiled roofed dwelling house (*kop-ole*) was made, first of all by the well-to-do village priest, Narsingh Dhurwa. No specialists from within or outside the village were engaged by him for constructing this new type of house, for it is said the people within the village were quite familiar with the methods of constructing the kop-ole, as the houses of same type are built in the adjacent villages of Tongpal, Leda, etc. For that matter, till the time we left the village, two more Dhurwa householders had broken down their two-sloped thatched houses and had constructed their four-sloped houses in the same hamlet but away from their previous house site. Quite apart from the prestige value, the four-sloped houses are said to provide more living space than that provided by the two-sloped houses ; while the roofs which are set with tiles are stated to stand against the rains much more effectively and for longer period than the thatch covered roofs, and, finally, the shortage of the required thatched grass can be adequately met with by preparing the tiles themselves or through others engaged in this trade. Enough it to say that the ground plan of the four-sloped tiled dwelling house is, like that of an ordinary *dandi ole*, rectangular in shape and is provided with a plinth of 6″ with the partly open veranda surrounding the two inner rooms (bacha and bakra), while the roof is generally 25′ in length and 14′ in breadth.

As against the general practice of owning the ole and char commonly by a single householder, not all the cattle owners of the village possess a cattle shed of their own. The limited number of the cattle sheds that are constructed and owned by the cattle owners of the Marenga village, are allowed to be used by others not having their cattle sheds, especially during the rainy season. For the rest of the year, the cattle are tethered in the open ground outside the closed courtyard (veli) of their houses during the summer and winter months. The cattle sheds, too, are built outside the veli, but within their easy reach. These are invariably open on all sides with two-sloped roofs covered with thatch or tiles. The pig sty (*dada guda*), too, is built outside the courtyard but very close to the dwelling houses of the respective householders. These enclosures for the pigs are rectangular or circular shaped and are either made of bamboo wicker work or consists of horizontally laid wooden logs fixed between vertical posts with a small

door fixed for the entrance or exit of the pigs and piglets. Generally, these measure 3′ in length and 2′ in breadth, reaching to a height of nearly 5′, and while some have two-sloped thatched roof, others are provided with sloping roofs. Similarly, all the householders, owning goats and/or pigeons, construct separate sheds for their goats and/or pigeons. These sheds called the *meva* or *cheri* (goat) *guda* and the *pereda* or *periya* (pigeon) *guda* are uniformly built high up on the raised platforms towards the far end of the courtyard. These are usually two-sloped thatched sheds provided with bamboo wicker worked walls ; but while a goat shed is fitted with a sliding bamboo door having a log of wood which serves as a ladder (*kul*) to reach it, the shed meant for the pigeons is much smaller in size than the former and is provided with holes. The average height of the former is 6′ and that of the latter is 8′. So far as the village shrines (*gudi*) is concerned, it may be mentioned that the icons representing the deities in question are allowed to remain excepting the below mentioned shrines, open and exposed, without any roof to cover the shrines. The shrines of the Hinglajin Mata and Dongri Gudi *alias* Dongar Dei belonging to the Dora Jama consists of a two-sloped thatched huts, though the former is a shed which is open on all sides, nearly 8′ in height, and the latter is fitted with bamboo walls and is nearly 5′ high. The Matichi, too, is a small sized two-sloped hut. The Muttak Gudi shrine, however, consists of the upright posts which are joined together by the side and transverse beams, without having any roof whatsoever, though it is reported that its two-sloped thatched roof was burnt some time back. Whether open or roof-covered, the shrines of the village are encircled with bamboo fencing and are provided with an entrance door in the centre. The fenced-in space of the shrine is usually kept clean, being smeared every now and then with cow-dung water by the priest or one of the male attendants. Likewise, the two workshops of the blacksmiths are provided with a two-sloped thatched roof, measuring 6′ in length and 4′ in breadth, reaching to a height of 5′. These are open on all sides and are permanent structures, being built by the respective (Bison-horn) Maria Lohar in the open ground lying close to their respective dwelling houses.

Concerning the temporary shelters, it may be said that the platform huts (*chopla*) are built in the middle or on the sides of the agricultural fields. A chopla remains open on all sides, without any roof, being erected on four to six vertically fixed wooden posts, reaching to a height of nearly 9′—a bamboo piece with nodes intact serving as a ladder (*kul*). These platform huts are meant for keeping a watch against the prowling men and stray cattle and

are built jointly by a number of householders whose fields are lying adjacent to one another, while a number of able-bodied men belonging to the respective householders guard crops in their fields by turn. As opposed to the chopla huts, the *chela* huts are enclosed by bamboo walls and are built on the ground along the higher levels of the banks of the perennial stream of the Baru. Every year the concerned householder constructs these chela huts by the side of his specific garden (*attar*). Men and women (to be sure, older ones) with their children stay in these single-roomed tenements continuously during the winter season, irrigating, tending and watching their cash crops which are grown in the parcelled-out gardens. Meals are also prepared in these two-sloped thatched roofed temporarily—built field huts. These field huts and platform huts are constructed almost every year by the people living in the village. Another type of temporary hut which is commonly known by the Halbi term of *ladi* is also built in the threshing floor (*kali* or *kothar*) for the limited purpose of harvesting and threshing the paddy, etc. No meals are ordinarily prepared inside a ladi, but only faggots of wood are burnt inside it during the cold nights for warmth. It is also a two-sloped thatched roofed and closed hut. Yet another type of shed is built by the respective householders inside their courtyards by connecting four to six upright vertical posts with beams. This improvised shed (called *pandir* or *chapper*) is used specifically to dry the tobacco leaves by suspending them on bamboo mats. But on such occasions as the marriage and death anniversary, the pandir is readily built outside the courtyard when it is covered with branches of such trees as the sergi, mahua, etc. in order to provide shelter against the sun to the guests invited on these occasions.

No natural shelter is reported to have been ever used by them ; but one of their legends makes a reference to a cave-dwelling (*tula koppa*) which is reported to be lying within the confines of the Marenga village. The particular spot in question at present consists of the boulders (*kelkul*) embedded in the soil at the foothill of the Dangar Candi. It is believed that in the distant past there existed a cave where lived the ancestors (*purkha*) of the original Dhurwa settlers of the village of Marenga, called the Neutaks.

Dress and Ornaments

Both men and women in and around the village of Marenga move about barefooted. Even when visiting different villages and distant market villages, nobody in the village covers his or her

foot with any foot wear. In fact, excepting the loin-cloth-cum-waist-cloth (*kangrai*), a Dhurwa of the Marenga village remains for most of the year bare-bodied. The kangrai (also called the *dhoti*) consists of a thick sheet of plain white cotton cloth with chocolate coloured borders (*patta*), running length-wise and breadth-wise. A kangrai is sometimes decorated at the lower end with floral designs of coloured thread work and provided with tassels at the bottom, when it is used during the dancing and other special occasions. It measures generally 10′ in length and 2′ in width and is often purchased from the Mahar Vendors for a sum ranging between Rs 3 and Rs 4 per piece. It is normally worn in the following manner:

One end of the kangrai at the back is first tucked inside the cotton thread tied round the hip, while the other end is carried in front by covering the private parts, then the free end of the kangrai is wrapped two to three times round the waist and the upper part of the thigh, and finally, its upper end in its unfolded width is drawn in such a manner as partly to show the covered private parts in front while covering completely the buttocks. A few Dhurwas, however, prefer to keep the tail-end of the kangrai at the back rather hanging down over one of the buttocks. It may be added that the Dhurwa use a smaller piece of cloth, measuring 48″ by 24″ (called kopni) as a loin cloth, whenever they work in the fields, etc.

Some Dhurwas in the village are found to wear the wrappers (*barki*) for covering their bare-bodies during the chilly weather. It consists of two separate pieces of thick sheets of white cotton cloth, which are sewn together and measures 168″ in length and 48″ in width, being prepared on handlooms by the Mahars who sell it on a rate varying between Rs 5 and Rs 6. The usual method of wearing a barki is by covering both the shoulders and the neck and allowing it to fall below the ankles. Yet others possess the sleeveless jacket (chapkan) which consists of two separate pieces of white cotton cloth, sewn together at the back but kept open in the front. But whether it is worn along with or without a barki, the chapkan is closed at the neck. Quite a few chapkans have floral designs made of coloured cotton thread both in the front as well as at the back. But most, if not all, the Dhurwa wear a cotton cloth round their heads (called *peta*), especially when going to attend the markets, etc. This turban cloth is usually of the same size as kangrai; but some of the well-to-do Dhurwas of the village wear on ceremonial occasions the *kosa* turban (called *potia*) which costs between Rs 10 and Rs 12.

In addition to the above garments used by the menfolk, the school going boys as well as some adult males wear shirts which are purchased readymade from the weekly markets at Re 1 (for boys) and Rs 2·37 (for adults). Some of the school going boys also wear the underwears as well as the short pants. Towels and/or kerchiefs are also purchased by the villagers for their daily or ceremonial use. It may be remarked that the male members belonging to the Rawat, the Mahar, the Bhatra, the Bison-horn Maria and the Maria Lohar ethnic groups settled in the Marenga village, also, wear the same garments as have been described above. This uniformity of dress is so striking that the informants are unable to identify a stranger by means of dress alone.

A Dhurwa woman wears white cotton cloth, locally called *ganda* or *dhoti* which measures nearly four yards in length and one yard in width. The ganda cloth is prepared by the Mahar who sell it at about Rs 8. The method of wearing ganda is generally as follows:

After it is double-folded, it is wrapped two to three times round the waist, while the surplus side is carried diagonally over the right shoulder, and the folds are spread in such a manner as to cover completely the breasts, but the left shoulder and both the arms are left open and free; and then the free end of the cloth is carried over from the right shoulder to the back and tucked in the folded portion at the back or in front towards the left side. The Dhurwa women sometimes carry the surplus end of their ganda diagonally over the left shoulder instead of the right, while others tie its two (free) ends in a knot on the left shoulder thereby covering the breasts but keeping both the arms free (like the Rawat and Bhatra women). A few women were also observed to be wearing the mill-made dhotis from the weekly markets. Like their menfolk, the women also are said to wear the loin-cloth (*kopni*); wrappers (*barki*) and the jackets (chapkan) too are worn by the Dhurwa women.

Regarding the dress worn by the dancers, it may be stated that the females have no such dress, but the male dancers wear the full-sleeved long black coat closed at the neck. These coats are worn over the kangrai by the Dhurwa young men on such occasions as the Mandai and marriages. The Dhurwa male dancers also use turban (peta); its tail-end which is decorated with multi-coloured thread work of floral designs is allowed to fall at the back, while the floral designs of thread work also made in front of the turban cloth are shown effectively by the concerned dancers.

Bunches of peacock feathers are sometimes fixed in the folds of the turbans or are carried in right hands.

All the Dhurwa irrespective of age and sex, living in and around the village of Marenga, wear the necklaces (*kandil*) ; but while the elderly men and small children wear a single string of coloured beads, being fitted on a string which is tied close to their necks, the young men and women suspend three to four rows of multi-coloured bead necklaces along with the glittering yellow metallic pieces called *jilmili*. These string beads are purchased from the weekly markets at rates varying from twentytwo to twentyfive Paise. The sole object of wearing kandil is to decorate their bodies. The bead necklaces are normally buried along with the deceased owner thereof. Besides the Dhurwa, the Bison-horn Maria and the Maria Lohar also wear the necklaces both in their everyday life and on ceremonial occasions. In addition to the necklaces, the Dhurwa of both sexes wear the brass ear-rings (*barri*) which are fixed in the cartilage below the helix as well as in the lobes of the ears. While the young men wear generally one ear-ring, the women put on at least two barris. These are prepared by the Gadawa (or Ghasia) by the lost-wax process, being sold in the weekly markets at six to twelve Paise, according to the size. The Rawat, Mahar, Maria and Lohar living in the village also wear the ear-rings (called in *halbi bali*). Some of the Dhurwa young men and the small boys attach a small gilt chain to the barri and allow it to hang as a sort of pendant down below the ears. These are called *juline*, being purchased from the markets. The bracelets made of brass or 'German silver' (called *cindup*) is also used by both the Dhurwa men and women ; but while the menfolk are content with only one cindup in either hands, their womenfolk wear more than two bracelets in both the hands. These are prepared by the Gadawa (or Mangan) who sell the same in the market at twentyfive Paise a pair. The members belonging to other ethnic groups (e.g., the Rawat, the Mahar, the Maria and the Lohar) inhabiting the village also wear the bracelets. Yet another ornament used commonly by both the sexes of the Dhurwa is the finger ring (*vat*). These spiral shaped rings are made of brass or aluminium alloy by the Gadawa (or Mangan) who sell the same at six Paise a pair. While the menfolk wear two to three *vatkuls* in their little finger, the womenfolk put on usually four to five finger rings.

Most of the Dhurwa women of the village wear the brass or German silver anklets (*pedil*) in both the legs 'arched over the ankle bones'. These are reported to be prepared by the Gadawa,

costing from Rs 5 to Rs 7 a pair in the weekly markets. Very few women use these anklets in their everyday life, but they usually wear them on such occasions as the marriage, mandai, etc. The women belonging to other ethnic groups (e.g., Rawat, Mahar, Maria, etc.) also use the anklets (called by them *pairi*). Almost all the Dhurwa women (as also the Rawat and Mahar womenfolk) wear the necklet called *sutoli*. It is made of German silver by the Gadawa who sell it at Re 1. The Dhurwa womenfolk wear, in addition to cindup, another type of bracelets called *patta*, which are purchased from the market at twentyfive Paise. Armlets called *bautale* are also worn by the Dhurwa womenfolk above their elbows. While these are mostly made of brass, a few of the womenfolk possess silver *bautale*, having purchased it at Rs 8. The brass toe-rings, called the *jetyal* or *chutki*, are also worn by the Dhurwa women, preferably, in second and fourth toes, being purchased at six Paise. Multi-coloured glass bangles (*churi*) numbering six to eight too are worn by them. Some of the young Dhurwa women of the village wear the circular shaped silver earrings (*kilwa*) in the lobes of the ears on festive occasions—these being purchased from the markets at Rs 3 per pair.

A limited number of the young Dhurwa women keep bamboo or wooden combs in their hairs, while some of them keep the pendulous bunch of their hairs tied at the back by means of self-prepared *chaunri* which consists of a circular shaped fine bamboo splints fixed by means of kosra silk. Both the Dhurwa men and women wear the amulets (*chakar* or *kardoli*) round their necks or arms, being contained in copper or German silver cases. Finally, the dancing bells called *gangru* are used by the young Dharwa males while dancing; these bells which are made of brass or German silver, are tied round the legs by means of cotton thread and are prepared by the Gadawa.

There is hardly any Dhurwa woman in the village of Marenga who is not tattooed. The usual parts of the body having tattoo marks are the back portion of the legs, upper parts of the arms, almost bordering the breast, the forehead, the chin and the fingers. The main idea for having tattoo marks is to adorn themselves, and these marks consist of dots and crosses which are arranged either in the same lines or one above the other. It was reported that a Bargula (perhaps a Mangan) woman visits the area under our study every now and then from a distant village. She marks the tattoo marks by means of a needle and receives over and above rice, salt, etc. and Re 1 for her work. The women belonging to other ethnic groups also have tattoo marks.

Food, Stimulants and Narcotics

The Dhurwa and others living in and around the village of Marenga eat their meals generally twice a day ; first at about 12 noon (called *patka*) and the second at about 7 p.m. (called *cikod*). Their meals depend on the seasons of the year, which may be divided into three periods, namely :

(i) Post-harvesting period starting from the month of Dasserah (September-October) till the Laundel festival which takes place somewhere in January-February ;

(ii) Post-Laundel period starting from January-February till the month of Jaistha (May-June) ; and

(iii) So called Bhuk-bera months starting from May-June till September-October.

During the post-harvesting period, (i) each of their meals usually consist of the *veyu* (cooked rice), *cava* (rice gruel) and the seasonally available vegetables (*raba*) or the pulse (*dailu*) made into thick paste. In this period, veyu is cooked both the times namely, in the morning and in the evening. The cava (which is also called *pej*) is also prepared out of rice, being taken along with the main meals, as also at about 3 p.m., especially by the children, and next day morning. But during four to five months of the so called Bhuk-bera, (iii) the quantity of rice taken as veyu is often reduced, while the quantity of ratel or mandia is gradually increased. During the post-Laundel period, (iii) however, while some householders prefer to take the veyu twice a day, others prepare the gruel by mixing the ratel and rice almost in equal quantity. It is obvious from the above account that for a large number of the people living in the village of Marenga, rice forms the staple diet for about four months of the post-harvesting period, while for the remaining eight months rice and mandia together form the main diet of the people—the diet of the poor being supplemented (especially in the lean period) by such millets as the *kodon, kutki* and *jawari*. It may be added that when the seasonally available vegetables become scarce, people in the village take such pulses as *kutki, senwi* beans and *mung,* a few of them, however, prepare also the *urud, matar,* and *rahr,* also.

For preparing the veyu, the cleaned rice is first put inside the earthen vessel (*cora*), containing the boiling water, and is allowed to remain on fire till the rice is cooked without throwing

away the starch. The cava is made by mixing the powdered (*atta*) rice and/or ratel in water, which is then boiled in vessel till the thin paste is formed. The raba or the dailu is cooked by putting vegetables or pulses inside the cooking vessel containing cold water, and after boiling them for some time, the spices, salt and chillies are added ; but in the case of pulses, onions are first fried (*bagar*) in oil in a separate vessel and then the bagar is poured inside the boiling pulses. The method of cooking the pig's flesh, the chicken and the birds (after these are cut into small bits) is almost similar to the process noted for the vegetables, though the pigs, etc. are first singed on the live fire (*chatata*) before being skinned and cut into pieces—the viscera being separately fried. It may be added that it is the womenfolk of the respective households who prepare the meals ; but during the period of menstruation, their menfolk are expected to attend to the cooking. Moreover, on ceremonial occasions like marriages and death anniversaries, the menfolk prepare the meals for the whole congregation assembled on the occasion, excepting for such higher caste groups as the Rawat, Dhakar, Kallar, etc. As a general rule, the leaf-cups and platters used for taking the meals are made by the womenfolk of the household from the *siadi* leaves which are collected by them from the protected forest or nearby scrub jungles, though occasionally these are purchased from the women pedlers. In fact, quite often the womenfolk are found engaged in folding two to three leaves into the required shapes and sizes of cups and platters, being held securely by means of bamboo splinters or thorns. Rarely, however, are the metalled or earthen dishes and tumblers used by the people living within Marenga village.

In their everyday life, one finds quite often that the whole household partake their meals together, and everybody helps himself or herself from the conveniently placed cooked food articles. While some members sit on the wooden seats (*pakki*), others take their seat on the bare ground. The usual practice is to place two to three leaf-cups in front of the person taking his or her meals. The course starts from the cava which is removed from time to time from the earthen or aluminium vessel by means of a ladle. The cooked vegetables or the pulse is kept in a separate leaf-cup, while the veyu is taken from a large sized leaf platter. It is expected that everyone washes his or her hands or feet, as also clean the teeth and mouth before taking the meals. As soon as the meals are over (literally : " when four fingers of the stomach, i.e., one *dunni*, are filled ") the leaf-cups are thrown away by the respective persons, and the hands are washed and mouth/teeth are cleaned. The womenfolk sweep the ground later on, as also clean

the cooking utensils. During the busy agricultural seasons, of course, the meals (*patka*) are taken either in the respective domiciles turn by turn or the food is carried by the womenfolk to the fields where the menfolk are busy in different agricultural processes. On the occasions of marriage and death anniversary, among the Dhurwa, the menfolk are served first, and the turn of the womenfolk comes later on. These guests sit on the ground in rows and are served by both men and women—the small girls are especially engaged in fetching water from the nearest water sources. The food is served from the first man (or woman) in rows without any consideration being shown to the social status or economic position of the guest. But it may be pointed out that the Mahar and the Lohar sit in separate groups, and the food is served to them without touching their outstretched hands, while the Rawat are given the uncooked rice, salt, etc., to be cooked by them in their respective homes.

The vegetables taken by the Dhurwa and others living in the village of Marenga are generally grown in their own gardens (attar or badi). The main vegetables commonly used by them in their everyday life, especially during the post-harvesting and the post-Laundel periods, are the leafy vegetables (raba or sag) of the mustard, *rajgir* and the *benda kucca* ; *kelengi* (sweet gourd) and the *burka* (pumpkin) ; *kakandi* (brinjal) and the *madav banga* (tomatoes) ; *munga* (drum sticks), *kebul* and *kalmal kanda*. The *kerla* (memordica charantia) and the *bindi* (ladies' finger) are sometimes purchased from the weekly markets, as these are not locally grown. It may be remarked that potatoes are neither grown in and around the village of our study nor generally sold in the nearby markets. In addition to the above-mentioned vegetables, different kinds of edible forest products are collected especially by women and children. Some of these are cooked as vegetables, others are roasted on fire (chatata) or eaten as fruits. The important edible products collected from the trees standing in the forested hills and scrub jungles are the flowers and fruits of the mahua or irpul (bassia latifolia), mangoes (including the kernels), the fruits of the tamarind and other trees, such as *girli*, *gatul*, *tendu*, *seona*, *jamun*, *aonla*, etc., wild figs or *dumor*, plantains, *kamla*, bean pods of the ciadi creeper, the young green-shoots and piths of the bamboo culms, the interior pith of the salphi or sago palm and chhind and the mushrooms. In addition, field rats and red ants after being roasted on fire are eaten with great relish. To the above list may be added the birds belonging to the patridge family, which are killed by bows and arrows, and the various types of fishes which are caught by means of the nets and traps.

Besides these articles of food, the following snacks form important items of diet of the people living in the village of Marenga: *bidrul* (the puffed paddy), *cangul* (the flattened rice), *murmura* (parched rice), *bajia* (made of powdered chena), *bakkel* (made of rice powder mixed with *urud* and fried in oil), *gur* (jaggery), sweets, etc. It may be noted that all these food articles are prepared and sold by the Rawat, the Panara and the Dhakar, and the Dhurwa regularly purchase from the sellers in the market for their own consumption. Of course, the Dhurwa of Marenga specially make *roti* from the powdered rice mixed with black gram in their homes. They also make on the Laundel festival, *kichedi* consisting of rice and *dal*, in which turmeric, salt and oil are added, while on Gunetiar they prepare *bobu* or *bakkel*. The parched mung and urud dal, dry mahua fruits, roasted or fried, powdered millet mixed with urud and made into balls, are their favourite snacks.

Although some Dhurwas of the Marenga village know how to milk their cows, still neither the milk (*gau-ras*) is usually taken nor any preparation of it is made by them. It may be added that none except the Maria and the Lohar in the village of Marenga take beef. In fact, the Dhurwa of Bastar regard themselves as a separate and distinct ethnic group from their beef eating Parja-brethren. Even the Maria and Lohar living in the village do not ordinarily take beef within the village. Furthermore, not only the Rawat and the Bhatra living in the village of Marenga but also about a dozen Dhurwas of the Marenga village abstain wholly from taking the pig's flesh with the result that they are served on ceremonial occasions with chicken instead of pork. It may be remarked in this connection that during the performance of religious festivals, the head of a sacrificed pig or chicken is separately cooked and is eaten by none other than the male members of the Pelac Jama. Similarly, the ceremonial meals are to be prepared by the male members of the Borka Jama. However, all those who are required to perform the necessary rituals connected with any ceremony, observe the fast until the ceremonial meals are prepared—the object being to offer the Man (respect) to the deity in question. Of course, the "higher" caste groups, e.g., Rawat, Kallar, etc., participating in the common village ceremonies prepare their meals separately, while the "lower" caste groups take their share from the meals prepared by the Dhurwa cooks (*borka*).

The *tora* oil is the most commonly used oil in and around the village of Marenga. It is extracted by pressing the mahua fruits from the tree plank press. The other edible oils used occasionally

are the sesamum and mustard. The *jada* (arandi) oil is reported to be used by the Kosta and Sundis only, while the cocoanut oil is used by some Dhurwa women as hair oil, being purchased from the markets. Quite often, the fat of pigs killed on certain occasions is used for the purposes of oil by the Dhurwa of the village. Mention may be made that the spices used by the Dhurwa and others are the onions, garlic, turmeric, tamerine, ginger, chillies and *dhania*.

While the Rawat and the Bhatra do not drink rice beer (*landa*), the Mahar, the Maria and the Lohar relish it as much as the Dhurwa of the village. There is hardly any important occasion when the Dhurwa do not prepare the *landa* at home and serve it to the assembled ones. The method of preparing it is as follows: The powdered rice (*pitia*) of the germinated paddy is well mixed with the ordinary rice powder or the mandia powder. Then an earthen vessel (*atara*) containing water is placed on fire, while above atara is kept in another earthen vessel (*turwa*). The turwa is provided with a hole at the bottom, which is covered with a lattice bamboo slices (*chawi*). The mixed powdered rice/mandia is kept inside the turwa, while the respective portions near the top of the atara and the bottom of the turwa are covered by means of the rice paste so as to prevent the steam to escape. When the contents of the upper vessel (viz., turwa) has been steamed long enough, the mixed rice/mandia powder is put inside another earthen vessel (*landa chuari*), and the water is slowly added to it. After shaking it thoroughly, it is allowed to ferment for three to four days.

The other intoxicant is *salphi*—the fermented sap of the sago palm. The ends of the flowering peduncles are cut off so as to act as saps, and the earthen vessels (*kundri*) are fastened below the cut to catch the sap. It may be remarked that after some years of tapping, the spadix ceases to flower, when the interior pith of the stem is very much relished by the villagers as a whole. However, it is the spirit which is distilled from the mahua or irpul (bassia latifolia) that is largely taken by the Dhurwa and others from the nearby distillery at Leda. This spirit (*arak* or *melu*) is sold by the recognized licences in the distillery shops at thirty-seven Paise per bottle. There appears to be no restriction to get an adequate supply of this distilled liquor either on their religious or ordinary occasions.

No Dhurwa of the village takes opium ; instead both the men and women take the tobacco powder (*dungia* or *churti*) mixed

with lime. It is kept in pouches which are either made of brass or wood being tucked inside their waist-cloth. Even small children are found to indulge in this habit. No caste distinctions are maintained by the Dhurwa in respect of accepting the churti from the hands of the low caste groups like the Mahar, the Maria and the Lohar although the lime is not allowed to be mixed by them when they accept the tobacco powder from their hands. The manner in which it is taken is, first, it is rubbed on the palm of the left hand by means of the thumb of the right hand, and when it is reduced to fine powder, it is mixed with lime. Then, it is put inside the mouth by holding it under the tongue near the lower lip—the excess saliva being frequently spit out.

Weapons, Implements and Domestic Articles

The bow (*vilu*) and the arrow (*ambu*) from the most important weapon of offence of the Dhurwa living in and around the village of our study. These are used by almost all the adult males of the village; even the small boys are provided with small bows to shoot the birds and fish. It is, however, during the ceremonial hunting season that the bows and arrows are used for hunting the wild animals like the chital, sambar, kodri, wild pigs, etc. Even otherwise, whenever a Dhurwa pays a visit to distant villages or passes through the dense forests, he would be accompanied by vilu and ambu—the former slung across his shoulder or carried in his hands, while the latter fixed in his hair tufts or tied round his turban cloth or carried in his hands along with the bow. These are self-prepared, but the iron heads of the arrows are made by the village smith. Strictly speaking, the vilu stands merely for the stave of the bow which is made either of bamboo or the daman wood. The back of the stave (called Mulka) is naturally curved with its belly (pota) trimmed flat—the thick portion being 1′-3″ in breadth, but gradually tapering towards the two horns. When the bow is unstrung, the stave measures from 4′-9″ to 5′ from horn to horn, while the bow-string (called alka) measures 3′-9″ and consists of the outside of a green bamboo, both ends of which are tied by means of fibres of the *siari* creeper to the notches (ala) on the horns of the stave. The alka is always fastened to the lower tip (model) of the stave, which remains rested on the ground. The bow is strung by bending it and pulling its upper horn. The stave is usually tied with the kosa silk thread by means of the melted lac (celub). The arrows fitted with leaf shaped barbed iron heads are called *ambu*—the wings of the iron heads curve concavely from the pointed tips to barbs (*tirra*) having prominent mid-ribs (*darul*) with cutting enges on both sides. Generally, the

breadth between the two curved barbs is 7′-5″ and the length from the arrow head to the pointed tang (guder) is 6″—the tang fixed inside the head of the bamboo shaft (kolu) being tied with the kosa silk thread by lac—and the total length of the ambu is 2′-3″. Another type of arrow (called the *metad*) is used by the Dhurwa for stunning the small birds, etc. It measures nearly 2′ in length; either it consists of a natural bamboo knot cut into the required shape and size or is made of iron with bolted end. The Dhurwa also make use of fish arrow which is called *tomra*. It is made of an iron head with one wing and barb, which is fitted to a bamboo shaft and is used for shooting fish in the dark nights with the aid of lighted torches. But it may be pointed that only the ambu and mettad arrows are provided with a notch at the bottom of the shaft (called *terkab*), being tied by means of the siari creeper fibres and fitted just above the Terkab with feathers (kendil) of the peacock and other fowls by means of the kosa silk thread pasted on the melted lac. For releasing the arrows from the strung bows, a Dhurwa stands on feet slightly apart with his body bent forward over the left hip. The notch at the bottom of the arrow shaft is held against the bow string by means of the index, middle and ring fingers of the right hand, while the left thumb rests along the inner edge of the belly of the stave. The arrow is placed towards the left side of the stave in the arch formed between the left thumb and the index finger—the index finger of the left hand remaining pointed along the top of the shaft, while the other fingers are brought round the back of the stave. The strung is then drawn by the right hand, and the arrow is released.

The most important cutting instrument used by the Dhurwa for a variety of purposes is the knife, called *kedub*. It consists of a curved iron blade fixed by means of a tang to a short wooden handle—the cutting edge of the iron blade gradually thickens towards the blunt edge, while the curved blade tapers to a point at the end. The blade is made by the local Maria Lohar (smiths) from the iron which is either smelted from the adjacent ores or directly purchased from the markets. The other cutting instrument used for all ordinary purposes is the axe (*madi* or *tangia*). It consists of curved iron blade with a sharp cutting edge, whose butt-end is socketed in a wooden haft, being wedged with a thin slip of wood. The iron axe-blades are available for Rs 2 to Rs 3 from the nearby weekly markets, being prepared by the Maria Lohar. The Dhurwa of Marenga also make use of a battle-axe (*perchi* or *potia*) which consists of a curved iron blade, having a concave cutting edge, while the convex outer edge is socketed in the centre to a wooden handle. Although it is used mostly

during dancing, but sometimes animals are sacrificed by it. Yet another cutting instrument used by the Dhurwa is *kodka* which is made of a curved iron blade fitted by means of a tang to the long wooden or bamboo haft. It is used for sacrificing the animals and for other ordinary purposes. Sometimes they make use of the old and rusted curved swords during dancing as also carry spears (*bala*) on the occasion of marriages. It may be added that for catching hare, jungle fowls, mice, etc., snares and springs are used by them as traps which generally consist of bamboo stakes or spikes (*kutil*) ending in a moose, being planted near the places usually frequented.

The Dhurwa of Marenga who are settled agriculturists make use of plough (*nangil*) for cultivating their agricultural fields. The plough consists of a single piece of handle (*kei*), the body and the shoe (*eri*), being fitted to a separate piece of beam (*dandi* or *koti*), while the plough share (*puyil*) is attached by means of an iron socket (*goli*). The wooden plough is self-made by the Dhurwa and the plough-spare is purchased from the weekly markets at Rs 2—the ordinary repairs being made by the village smith. The yoke (*juvadi* or *kacal*) is a long carved wooden piece fitted with doubled wooden pieces (kutil), being tied to a pair of bullocks by means of leather thongs (*jota* or *ulka*). The other agricultural implement used by them is puddler (*mawa*) which consists of a thick, flat wooden board fitted in the centre to a long beam (*dandi*) and is used for the Biasi purposes, when the cultivator stands on the wooden board, and the beam is yoked to a pair of bullocks who drag it along the fields where the rice is sown with a view to puddling the sprouted young plants. The hoe (*kotal*) is used for digging and levelling the fields, specially the gardens, and consists of a shouldered iron blade fitted by means of a socket to a wooden handle—the iron blades being purchased from the weekly markets. The scythe (*chetal*) is a curved iron blade, without the serrated edges, fitted by means of a tang to a short wooden handle and is used by both the sexes for harvesting purposes. Another implement used by them is the bamboo rake with projecting ends (*total*), which is used during the threshing operations. They also use a shouldered iron crow-bar (*puyil* or *cooch*) and an adze—the former for digging purposes and the latter for preparing the ploughs, hafts for axe, wooden seats, etc.

The musical instruments commonly used by the Dhurwa males on the occasions of marriage, Laundel and Mandai, are the drums (*dhola*) and the bamboo flute (*tirli*). The drums are of two kinds, namely, two-skinned cylindrical shaped and single-skinned circular

shaped, while the flute generally measuring 14″ in length is provided with five finger-holes. Another instrument played by the menfolk, especially, on marriage occasions is the *gir kicha* which is made of iron and is provided with serrated ends. It is held in the left hand and is struck against by a spiked-ended iron rod from the right hand. The *gujri* is another dancing instrument which consists of a wooden staff, fitted at the top with iron bells containing stone pebbles, and is used to mark the time by being struck on the ground during dancing. The bugle (*kod*) is a long bamboo tube fixed to a mouth-piece and is used for calling the dancers to assemble. Mention has already been made of the brass anklets (*gagru*) which are tied round the legs by the male dancers who also hold in their hands the bunches of peacock feathers (*jalajal*) and wave it during dancing.

So far as their household articles are concerned, it may be mentioned that they use quite commonly the wheel-made earthen vessels in their everyday life. The Dhurwa and others living in the village of Marenga make the purchase of their earthen vessels from the weekly markets of Leda, Puspal, etc., although some of the Mahar women also sell these earthen vessels in different villages after making the purchase of these articles from the weekly markets. The earthen vessels used by the Dhurwa of Marenga are of red colour and are called by them accordingly as these are used for cooking the rice for storing the drinking water and for keeping the rice beer, e.g., cava, choura, nir choura and canda choura. In addition, earthen plates are used by them for covers or for keeping salt, chillis, etc. Moreover, they prepare the gourd vessels (burka) which are decorated with criss-cross patterns, etc., and are used for holding rice beer, sulphi, etc. While the well-to-do Dhurwas own and make use of the brass dishes (*thali*) and brass utensils, the ordinary Dhurwa use the aluminium vessels, tumblers and cups. A limited number of the Dhurwa and Rawat families of the village fetch, as also store, water in the brass gagra which is purchased at about Rs 8.

Regarding the basketry, it may be remarked that the Dhurwa living in the central-eastern portion of Bastar are well-known as the basket makers ; for that matter, they were originally called the Takra Parja, i.e., the Parjas preparing the bamboo baskets (takra). The present position regarding the Dhurwa of Marenga, however, is that (unlike the Dhurwa of other villages) it is only the menfolk who prepare the baskets of various shapes and sizes for both their own use and sale in the nearby weekly markets. The Rawat living in the village also know how to make the baskets,

albeit for their own consumption at home. Although even the small boys of ten to twelve years have been found to be preparing the bamboo baskets and selling the same in the markets ; still no Dhurwa of the village practises the basket making as a whole time occupation ; all that may be stated in this regard is that most of the Dhurwa take it as a spare time activity, being given as much importance and attention, as the making of the ropes, the cast-net fishing), tile-making, etc. The material used for preparing the baskets by the Dhurwa is the bamboo (*kon vedri*) which is available in the adjacent Nistari Forest. First, the bamboo culms measuring 16′ in length is cut into five to six pieces of 2′ to 3′ sizes which are in turn sliced in thin strips by means of a knife. The technique of plaiting the bamboo basket is usually to pass each weft over and then under two to three warpe, thereby producing the twill pattern (*kutel*) ; but a few baskets are made in check (*chole mur*) pattern (when the warp and the weft is passed over over and under each other singly)—the rim being invariably "twilled-twined" (when two to three wefts are crossed in front or behind one to two upright warps). The method of colouring the bamboo strips is to boil first the harra (*karkha*) fruits, when the bamboo strips required to be coloured are put inside the boiling fruits and are then allowed to dry up for a day or so ; but some of these are, later on, put inside the wet mud for some time to take the black colour. In some cases, the wefts of coloured bamboo strips or the green strips from the outer rind of the bamboos are plaited along with the dry plain bamboo strips, while in other cases an ornamental plaited ring is worked around the central circumference in a diagonal manner ; a few baskets are also plastered from inside with cow-dung so that the contents inside the baskets do not fall.

It may be added that they use bamboos not only for preparing the baskets but also for constructing the walls of their houses as well as fencing around their courtyard ; so also they make the matting (*chatta*), winnowing baskets (*kheti*), measures, ladles (*buree*), plates and umbrella hats (*kerre*) out of the same material. In addition to the large sized grain-bins, the Dhurwa of the Marenga village prepare different varieties of baskets for their own use as well as for sale in the nearby weekly markets. Most of these are noted below :

1 **Gappa :** Used for keeping such articles as rice/paddy, pulses, etc., measuring 6″-7″ in height and having 10″ diameter across the circular mouth, while the base is almost square in shape.

2 **Phuana :** Square-based and circular in shape, measuring nearly 10″ in height with 13″ diameter across the mouth.

3 **Venu Muhunda :** Pouches slung across the shoulder by means of a string (*todu*) and fitted with a lid ; used for keeping parched mung, gur and tobacco, etc., measuring 3″ in height, 5″ in breadth and nearly 2″ across the mouth.

4 **Bahana Takra and Tirre :** Same as Gappa, but smaller in size.

5 **Minu Moonda :** Fish basket with a constricted neck but having a wide open mouth, tied with a string (todu) to be slung across the shoulders, measuring nearly 8″ in height.

6 **Peda :** Box-type basket, fitted with a lid, used for keeping dried tobacco leaves. etc., measuring 9″ in height and 11″ in breadth.

7 **Uta :** Fish basket, measuring 21″ in height.

Personal Appearance, Cleanliness and Diseases

The Dhurwa of Bastar are considered on the basis of anthropometric measurements (Rakshit: 1960) to be short to below medium in stature (being 1500 to 1639 mm in height). They are largely characterized by dolicho- to meso-cephalic head and have predominantly chamaerrhine nose ; on the whole they "not only share the Australoid affinity with the neighbouring so-called Gond types of Bastar (e.g., the Dorla, the Muria and the Maria) but also with the larger tribal population of middle India".

Concerning the personal appearance of the Dhurwa, it may be said that while most of them have a crown tuft (*chapu*) drawn into a top-knot, others are found to wear a long, almost matted locks of hairs, tied in a knot, yet a few allow only small tufts of hairs to grow on the top centre of their otherwise shaven heads. The usual method of shaving the hairs from their heads and faces is by means of a single-edged razor blade fitted with a wooden handle, by means of a pointed tang, being wrapped carefully in in an old piece of torn cloth. The hairs to be removed first are softened by rubbing with cold water, and then the razor blade is applied downwards from the crown—the blade being occasionally sharpened on the thighs and calves ; and the unwanted hairs are thrown about unceremoniously. Since almost all the adult males of the village are adept in handling the razor blade, so everyone

is expected to help the other, as the occasion demands. It may be pointed out that unlike the Dhurwa, the Rawat shave their heads on death ceremonies. The Dhurwa women of the village, who never cut the hairs from their heads, are found to part their hairs in the centre (in front) of their heads. They generally apply the tora oil, but sometimes cocoanut oil is used in their hairs which are then combed by means of wooden, bamboo or plastic combs. Afterwards the hairs are collected at the back when a pendulous bunch (*chuta*) is made on one side by tucking the hairs through the parting of the hairs at the back end; but some women also tie the hairs at the back in more or less coiled form. Quite often the Dhurwa women keep their hairs tied by means of chaurni, while a few have been observed to arrange bamboo combs on one side of their hairs, just like the Maria and Lohar women of the village.

It is worthwhile to mention that the Dhurwa menfolk of the village move about during the festive occasions (like the Mandai, etc.) or whenever they visit other villages with their ceremonial axe (potia) slung across their shoulders. Unlike the ordinary axe (*tangia*), the potia is not used normally for cutting purposes, but its iron blade is decorated with incised figures of human beings, sun, flowers and peacocks, while the wooden shaft being inserted in a socket is also decorated at intervals with tin pieces. It is specially prepared by the Maria Lohar who sell it in the market places at about Rs 3. It may be added in this connection that there being no pack animals in the village, the Dhurwa of Marenga carry the logs of wood, food grains, etc. on their shoulders, but some times heavy loads are carried by hanging the equal portions of the load on the two extreme ends of a bamboo carrying stick (*kawad*) or by suspending it from the middle when two to three men carry each end of the carrying stick on their respective shoulders. The womenfolk, however, carry the loaded baskets, water vessels, etc., poised on their heads. It may be remarked that the most favoured position adopted by a Dhurwa for sleeping purposes is to spread himself preferably on a bamboo mat either on his back or side ways with his head resting on his arms or on a wooden seat, while the sitting posture adopted usually by menfolk is to rest his buttocks on the ground with knees drawn up but the womenfolk spread both their legs lengthwise. They have also been observed to take their seat occasionally on the wooden seat (peeda), but normally they sit on the bare ground.

With regard to the cleanliness of body, it may be pointed out that both men and women take a dip in the flowing water of the

Baru stream or from the standing water of the water pools, whenever they feel hot or their bodies become dirty. The womenfolk, also, take bath after their menstrual period (*gandel*) is over. Both the sexes, however, bathe after burying the dead as well as on the occasion of the death anniversary (*chutak*). The priests are expected to take bath prior to the performance of the *puja* (rituals) in their respective shrines. While some menfolk bathe naked, others take bath with their loin-cloth on ; but neither any soap is applied nor any towels are used by them. After emerging from the water, the same dirty cloth, as was used previously, is put on. The womenfolk bathe with their ganda cloth on their bodies and emerge from the water with their wet clothings wrapped round the body, though change it soon after. The two sexes do not bathe together—a separate place is marked for the womenfolk to take bath as well as to wash their clothings. The infants and the little children are given a wash by their respective mothers or female relatives by pouring water over their bodies after having massaged their limbs with oil. To scour their hairs, the womenfolk apply ashes (*nidu*) or tamarine or rima or jhili.

All the Dhurwas and others living in the village are in the habit of cleaning their teeth by means of twigs, preferably of *palas* tree. They usually clean their teeth as well as their mouth before taking the morning meals, even small children are expected to be regular in this respect. It may be further stated that they rarely keep their clothings exposed in the sun. Their beddings which consist of thick wrappers of cotton cloth and (in a few cases) of blankets are also not kept in the sun. Their dirty cotton clothings are, however, washed by the womenfolk first by boiling in an earthen vessel—the hot water being mixed with ashes. Then they beat them on the smooth stones lying near the water sources by means of hands. Mention has already been made that there are a number of scrub jungles and barren lands in the village, which are normally used for the defacation purposes by the people. No water is used by them after the evacuation ; instead leaves and earth or stone pebbles are used by them for this purpose, though the pigs soon act as the scavengers with the result that no trace is left of the human excreta in any part of the village. Another favourite place for defacation purpose are the gardens lying at the back of the houses. Generally, both men and women attend to the nature's call in the early hours of morning ; the children, too, are required to control their bowel movements at an early age. Both the sexes urinate in a sitting posture away from the thoroughfare or the lanes of the village, preferably behind the trees, and it is considered indecent to urinate while the womenfolk are passing by. The

refuse that is collected from the respective hours by the concerned womenfolk is usually removed and thrown in an open ground outside the enclosed courtyard. The cow-dung of their cattle, however, is collected and dumped together at a place for the use of their kitchen gardens.

Perhaps because of their use of the dirty, infected clothings, most of the Dhurwa (and others) of the village suffer from such skin diseases as the scabies (*kajra*), ring-worm (*dad*), etc. The itching and the constant irritation accompanying the skin diseases are alleviated to some extent by taking a hot water bath and massaging the affected parts with the tora oil; but what adds to their sufferings is when they sleep with their bare bodies exposed to the fire during the chilly nights of winter. There are a number of water pools in the village, which are the breeding places of mosquitos, so it is not surprising that the people suffer from malaria. The other disease from which the people suffer is yaws, which is "a contagious inoculable tropical disease running a chronic course, appearing at the forehead, face, neck, armpits, groin, genitals, perineum and buttocks". Dysentery, small pox and rheumatism are the other dreaded diseases suffered commonly by the people living in the village. So also the rate of infant mortality is high, and it is a pathetic sight to see how the parents make frantic efforts to save their dying children. No dispensaries are opened nearabouts—the nearest hospital in the area is situated at Jagdalpur (35 miles north of Tongpal) and at Sukma (31 miles south of Tongpal). The local remedy open to the villagers suffering from the disease is to approach the medium (*sirha*) and/or the medicine man (*guneya*). While the former is expected to determine the cause of the disease (*dev betana*), the latter wards off the disease by 'blowing away' (*jad pukhna*) as well as by prescribing the medicinal herbs (*jadi buti*). In addition, the puja is regularly offered to one of the village deities to ward off the disease. In most cases, the patient is required to stay near the house of the sirha/guneya/pujari, under whose treatment he (or she) might be, while the patient is attended to by his near relatives. In case, the patient recovers, the deity is propitiated by fulfilling the vows. Whenever there is a case of snake bite in the village, the special services of an *ex*-Forestor, a mahanti, are called forth. It may be pointed out that the poisonous varieties of snakes, like Cobra, are immediately killed, if it is located, regardless of the fact as to whether the killer belong to the Cobra (*nang*) clan. Then, again, some of the village dogs are reported to become rabid, especially during the hot summer days, when these are instantaneously killed by means of stones,

even arrows are used, however, favourite the dog might have been previously to the particular household.

It was reported by the Kotwar of the Marenga village that during the period of 9 years (i.e., 1949 to 1957), 66 death cases took place. Out of them, 45 were said to have died of fever (?), 3 from snake bites, 3 from dysentery accompanied with vomiting, 2 from swelling of feet, one woman from child birth, one from cough and cold, and 11 persons had passed away undiagonised. It may be added that during the period of our field study in the village of Marenga from January, 1958 to January, 1960 (with breaks), not less than 35 death cases were noted by us. Out of them, eight persons were more than 50 years of age and 19 were infants (i.e., less than 5/6 years old). It was with a shock that we learnt that from April, 1958 to November, 1958, as many as 15 children and 3 adults had passed away in the village of our study largely due to some (unknown) stomach ailment, accompanied with dysentery, fever, and vomiting. Then, again, out of the total number of 121 households in the village, 27 had to mourn over the loss of one or two members of their families during the period of two years (1958 to 1960). Quite a number of cases were such that the father or the mother got infected while attending her ailing infant child with the result that the infant child passed away along with one of its parents.

CHAPTER FIVE

SOCIAL STRUCTURE

The Tribe

Taking the lead from the orthodox procedure in Social Anthropology, we may classify the social groupings comprised within the Dhurwa community as involuntary and voluntary. The former category would include all those stable and coherent social groups to which a person belongs on the basis of kinship which may be real, fictitious or assumed, while the latter category may be further sub-divided into territorial (e.g., domicile, hamlet, village, etc.) and associational (e.g., friendship or recreational groups, etc.). The tribe which form the largest unit of the involuntary social grouping may be defined (in the words of Dr. S. Sinha) as follows :

> "A group of people, roughly occupying a territory for a considerable length of time and having a consciousness of belonging to that territory, often having the idea of being the masters of that territory. The group consciousness may be reinforced by such specific cultural symbols as a characteristic language, rule of endogamy and existence of an overall social or political organization uniting the group. Quite often we may find the members of such a group, defined as a tribe, having a special name allocated to them either by themselves or by outsiders."

We may now examine as to how far the Dhurwa community in Bastar fulfills the various criteria (as mentioned in the above descriptive definition) for being considered as a tribe. It may be mentioned at the outset that so far as the etymological origin of the term (Dhurwa) is concerned, none of the informants could give a satisfactory account. All that they could relate was to the effect that since long the practice in Bastar was that a (Dhurwa) headman of the village was designated the 'Dhurwa' in contradistinction to the term 'Peda,' which was used exclusively for the (Bison-horn) Maria headman of a village. While Russel and Hiralal (1916 : 372) mention that "in Bastar the term Dhurwa conveyed the sense of a headman of a village", Burrow and Bhattacharya (1953 : Preface) suggest that the term Dhurwa "is an old indigenous word". The present position is that it is by the

name of the Dhurwa that the group under our study, as a whole, would prefer to be called, and resent if they are addressed as the Parjas, which term was used till recently to designate them. It was reported that this change-over to their present name (namely Dhurwa) by the erstwhile Parja dwellers of Bastar was greatly facilitated by the efforts of some members of the ruling family of Bastar during the rule of Maharani Prafulla Kumari Devi (1921-36). It is difficult to say as to how far this information is correct ; but it may be pointed out that as far back as 1909, the alternate name of the Parjas of Bastar was stated to be the Dhurwas (Brett). Thus the term which seems to have been exclusively used for the headmen of the (Dhurwa) villages, was applied later on to the common (Dhurwa) men and women, and the official recognition given by the ruling dynasty had merely put the stamp of approval to what was by them an accomplished fact.

On being pressed for further details concerning their distant past, the Dhurwa informants assert that the Parja dwellers in Bastar were called since a long time back the Raja Parjas, and what distinguished the so called Raja Parjas from the general body of the Parjas was that the former abstained from taking beef while the rest of the Parjas indulged in eating beef. It is further maintained by some old (Dhurwa) informants that the so called Raja Parjas were called in earlier times by the term of the Takra Parjas for the simple reason that they were well-known for preparing the bamboo baskets (takra) ; even at present, basket-making forms an important (albeit subsidiary) occupation of the Dhurwa of Bastar. It is interesting to note in this connection that Russel and Hiralal (1916 : 372) have distinguished the Bastar Parjas from " other divisions of the Parja tribe " by designating them as the Thakara or Tagara which stands (according to them) for a lord, thereby showing that " they were formerly dominant in that tract ". While enumerating the tribes and castes of Bastar, Glasfurd (1863) too makes a mention of the Tugara and Parja. Their distribution in Bastar is also shown by him and corresponds more or less exactly with that dilineated above by us.

What, however, is of special importance for us to note in this connection is that the terms used by Russel and Hiralal as well as by Glasfurd, respectively, viz., Thakara or Tagara or Tugara, appear to be identical with the one mentioned above as the Takra. But neither the interpretation given by Russel and Hiralal (1916) nor the pumping together of the Tugara and Parjas by Glasfurd (1863) corresponds with the local version, for, as already stated,

the Takra (Parja) are believed to be the localized group of the Parjas dwelling in Bastar, who were referred in course of time by the name of the Raja Parjas. The contradiction between the local version and the report of Glasfurd is, however, removed by Brett (1909) who has stated that " the two sub-tribes of the Parja (namely, the Peng and the Mundra) removed themselves to Jeypore (Orissa) ", thereby implying that the only remaining Parja group living in Bastar during his time was the Tugara (i.e., Takra). This statement is confirmed by Russel and Hiralal (1916) who have mentioned that " out of the three divisions of the Parja tribe, only Thakara or Tagara (i.e., Takra) is found in Bastar".

the effect that the Peng Parjas along with the members belonging

It is worthwhile to add in this context that Brett (1909) has noted a local tradition which is still current in Bastar. It runs to to other ethnic groups, e.g., Peeta Bhatras, Kosiria Rawats, etc., accompanied the Raja of Bastar (Chalkibans ?), perhaps, as retainers, when he migrated from Warangal. Curiously enough, the present-day Dhurwa of Bastar preserve a similar myth regarding their migration from Warangal (Thusu : 1963 : 18). Yet another common oral tradition is recorded by Thurston and Rangachari (1909 : 208) which is that " formerly Rajas and Parjas were brothers, but the Rajas took to riding horses and we became carriers of burdens and Parjas". Russel and Hiralal (1916) also relate the same story with the addition that the ancestor of the Parjas was believed to be the elder brother of the first Raja of Bastar. We, too, found the Dhurwa of Bastar repeating the same story as reproduced above.

Nonetheless, according to Russel and Hiralal (1916), the Parjas were the original (Gond) inhabitants and rulers of the country (of Bastar), while Grigson (1938 : 39) has noted that a Parja priest would often be required to arbitrate in boundary disputes in the (Bhatra) villages, which indicated that they were the original settlers who had been displaced by later immigrants. Burrow and Bhattacharya (1953 : Preface) also hold that the meaning of the term (Parja) in Bastar related specifically to the ryot (i.e., the cultivator—kap) as opposed to the Madia huntsmen (*Boyil*). We, too, have found that the Dhurwa claim that long ago they had permitted the later settlers, like the Boyils, to cultivate the *marhans* (i.e., fresh cleared forest lands) in their territory, reserving for themselves the right to cultivate in the proper fields (*beda*). Even now a person who wishes to settle in a Dhurwa dominated village is required to seek the formal permission of the Dhurwa elders of the village. In fact, our informants assert that

in some (Dhurwa) villages, the priests associated with shrines were previously Dhurwas who were, later on, replaced by the priests belonging to other ethnic groups. Obviously, the myth of their past regarding their migration from Warangal is not consistent with the above finding, namely, that they were the original settlers. It is quite possible that their Warangal migration myth may be an after-thought to rationalize their connection with the Bastar Raj.

The present position regarding the Dhurwa of Bastar is that they inhabit a contiguous territory in the central eastern portion of Bastar, overflowing in some directions towards the adjacent district of Koraput in Orissa ; and, what is more, they are not only conscious of belonging to but also are believed to be the early settlers (*mati log*) as well as the masters of that tract of the country. It is asserted by them that other caste groups have settled in their territory after seeking their permission ; even now this practice continues in the villages dominated by them. Thus, conscious of their homogeneity, the Dhurwa of Bastar maintain the social distance with other caste groups living in their territory. But, whereas the 'higher' groups in the caste hierarchy in Bastar combine the Dhurwa with the Madias by referring them as the Madia-Parja dwellers of Bastar, the Dhurwa, in their turn, call the 'lower' groups in regional caste hierarchy as the Madia-Mahars of Bastar. The result is that though the Dhurwa are assigned comparatively a low status in the caste hierarchy of Bastar, yet they feel themselves higher than other lower groups, thereby accentuating in them the exclusiveness and group consciousness.

Their group consciousness is reinforced by their speaking a common language which has been called Parji (Burrow and Bhattacharya : 1958). This language is recognized to be an important and independent member of the Dravidian linguistic family, closely related to the two languages spoken by the Ollar and Poya tribes of Koraput. The Parji language is divided area-wise into three to four dialects, namely, north-western, southern, north-eastern and (perhaps) extreme north-eastern. It may be pointed out in this connection that almost all the Dhurwa living in the northern portion of the Dhurwa tract have completely forgotten their mother tongue with the result that they now speak what seemed previously to be their second language, namely, Bhatri or Halbi. Nevertheless, these non-Parji-speaking Dhurwas who are estimated to form about 40 per cent of the total population of the Dhurwa in Bastar, still continue to remain conscious of their tribal identity and homogeneity.

The other unifying institution that unites the Dhurwa of Bastar is the rule of endogamy. Marriage relations outside their own community are disapproved in their society ; thus out of 455 marriage connections noted by us in the sample village of our study (namely Marenga) only two were made outside their own community. Where, however, inter-community marriages have taken place, whether inside or outside the village of Marenga, no serious notice is taken if the husband belongs to the 'higher' caste group, though seldom are the children of such marriages legitimized in the higher caste groups. The tribal solidarity of the Dhurwa is further strengthened by such cultural symbols as the Kurwal (Gurjal) dance and the ceremonial hunt. The particular Kurwal dance is performed collectively by the young men and women during the months of winter inside their own villages. The different styles of this dance vary according to themes of the (Kurwal) songs which are sung by well-known Dhurwa singers. The Kurwal dance and the typical dancing dress which is normally worn by the male Dhurwa dancers on such occasions as marriages and fair-festivals, set them apart from other ethnic groups living in and around the Dhurwa tract in Bastar. The ceremonial hunt which is practised almost simultaneously along with the sowing of paddy seeds, is however shared by other ethnic groups of Bastar, though the priest who performs the necessary rituals connected with the hunting is commonly the Dhurwa (Pelac) in the Dhurwa dominated villages of Bastar.

Lastly, we may mention that the Dhurwa of Bastar who are mentioned as one of the Scheduled Tribes of Bastar, lack an overall social or political organization to coordinate their activities. In the absence of a centralized tribal organization, the largest effective social or political unit among them is the religious-cum-social chief of a cluster of Dhurwa dominated villages. This hereditary Dhurwa chief, called the Cetia or Naik in the area of our study, is assisted in his deliberations by a council of (Dhurwa) elders. These caste councils (locally called panchayat) presided over by the respective tribal chiefs are found to be spread area-wise in the Dhurwa tract of Bastar, but these owe no allegiance to a common tribal chief, hereditary or otherwise. More of their panchayat system will be discussed later on ; it is enough to state here that the Dhurwa of Bastar are found to be organized in separate local groups, without being controlled by any centralized authority. Although, the respective localized units, existing within the Dhurwa community of Bastar, are united by the common observance of festivals and ceremonies, still there were apparently no traditional political ties to bind them together. But such forces

as migrations, trade, marriage connections and the regular visits paid by different dancing parties from one localized unit to another, presumably helped in maintaining some sort of communications between these various areal units.

Thus, it may be concluded that though the overall unity of the Dhurwa tribe of Bastar is not expressed in terms of centralized political institutions, still a sense of unity is found among the component areal units, inasmuch as they are united by such common bonds as the rule of endogamy, common language, consciousness of belonging to a single community, occupation of a contiguous tract of the country since long past, common heritage of the legendary past and such similar socio-cultural practices as Kurwal dance, etc.

Clans and Moiety

The Dhurwa of Bastar are divided into a number of patrilineal and patrilocal clans which are locally called the Bonsh (or Vansh). A Dhurwa clan (Bonsh) may be defined as consisting of a group of persons of both sexes, being characterized by patrilineal descent, patrilocal residence and possessions of distinct totemic names with a general belief in the common (totemic) ancestry in the remote past, and uniformly accompanied with food taboos. The clan is not only the largest exogamous unit with socially approved breaches, but the sacred and secular offices are also held by the (male) members of the (dominant) clam settled in the village(s) in question. But the clan group, as a whole, does not possess any economic holding in common, though its (male) members are found to perform some activities in common on certain occasions.

The following clans are found to exist among the Dhurwa of Bastar:

Nang	Cobra
Du (Bhag)	Tiger
Kavva (Kacheem)	Tortoise
Bokra	Goat
Konda (Gaunr)	Bison
Rami	A bird

It is evident from the above list that each Dhurwa clan calls itself by the name of its eponymous totem. But while the members affiliated to the Tortoise clan believe that their eponymous totemic specie, namely, tortoise, came to the rescue of their ancestors in the mythological past with the result that they neiher kill

it nor eat it, it was not possible for us to collect similar legends for other clans, though it may be remarked that so far as Rami, Konda and Bokra clans are concerned, it is considered a taboo by the respective groups to kill or eat the rami (bird), bison or the goat. It is, however, difficult for us to state categorically whether these clans regard their respective eponymous totems as their ancestors. But with regard to the Tiger clan, its members assert that though they had never come face to face with a tiger, still it was felt by them that they were not expected to kill it, because they regarded the tiger as their *purkha* (ancestor). Similarly, the members belonging to the Cobra clan agreed that a cobra should not ordinarily be killed by them. For that matter, they are enjoined to cover a dead cobra with a piece of cloth and to dig a hole to put it inside. A few informants even stated that they were expected to bow down in reverence if it is seen passing by. It was clearly stated by them that they recognised the cobra to be their remote Dadi Purkha (ancestor). It may be added that a cobra or a tiger is neither represented by any symbolic design nor the Dhurwa. We may also mention that though the general belief in having a common (totemic) ancestor is assumed and fictitious, still the members affiliated to the same clan believe themselves to be related to one another by consanguinity (Toler Vaub or Kutamb). The result is that no marriages can normally take place between the members belonging to the same clan. More of it will be discussed later on, in the meanwhile, we may mention that the descent among the Dhurwa is counted patrilineally, and the residence among them is patrilocal.

It may also be remarked that of the six clans, mentioned above, the Bokra, Konda and Rami are smaller in size, being confined in restricted areas towards the south and east of the Dhurwa tract of Bastar. The Tortoise clan, too, is not found in large numbers is any specific ritual performed by the respective clan groups of among them, but is found in and around the western-most villages of the Dhurwa tract. In fact, the Dhurwa quite often return themselves on first inquiry as belonging to either the Cobra or the Tiger clans ; but, later on, it becomes clear that there exist other clans too among them.

The clan-wise distribution of (94) Dhurwa families living in the village of our study (viz., Marenga) is that one family belongs to the Tortoise clan, nineteen families belong to the Tiger clan, and seventy-four families belong to the Cobra clan. With regard to the single family of the Tortoise clan, it may be stated that it was the father of the present head of this particular family who

had settled from his original village of Marjum in his wife's natal village of Marenga ; his son has also married in the same village. What is noteworthy to remark in this connection is the fact that the members belonging to the Tortoise clan (and settled in the village) are regarded for all intents and purposes as the consanguineals of the members belonging to the Tiger clan and living in the same village. Out of the nineteen families affiliated to the Tiger clan, six of them have shifted to the village of Marenga not more than a generation back, while the remaining (13) families who have settled in the village (comparatively speaking) since a long time back, are grouped into two agnatic lineages. A lineage may be defined as consisting of all the persons who are demonstrably descended from a common (known or unknown) male ancestor. Thus, the unknown progenitor of one of these lineages (comprising six families) is said to have originally hailed from the Chindgarh village. They have established their own shrine in the village, called Bairam Deo, where not only the annual rituals are celebrated in common but also the purificatory rites are performed by all the Dhurwa families of the village who are affiliated to the Tiger clan. Nothing, however, is known about the other lineage of the Tiger clan, excepting that its progenitor was called Joba Dora who had settled in the village of Marenga a long ago. Recently, a shrine has been built in the village, called Dular Dei, by one of the male members, belonging to this lineage, who acts as its priest ; but the rituals are still performed in common in the Bairam Deo shrine by all of them.

As compared to the Tiger and Tortoise clans, it is the Cobra clan that is dominant both in size and influence in and around the village of Marenga. Out of the seventy-four Dhurwa families affiliated to the Cobra clan, seventeen of them have settled in the village of Marenga one to two generations back, generally, in search of better economic opportunities there. This village also happened to be the natal village of their wives or mothers. What, however, is of the outstanding importance for us to note is that while all these seventeen families belong to the same Cobra clan, ten of them are specifically regarded, on the basis of kinship usage as well as for purposes of marriages, to be consanguineally related to the Dhurwa belonging to the Tiger and Tortoise clans. As opposed to these ten families, the rest of the seven families belonging to the Cobra clan are considered to be affinally related to the Tiger and Tortoise affiliated Dhurwas settled in the village—one of these agantic lineage group hailing from Murepal has established a shrine of its own in the village, called Pardesin Mata. Over and above, these recently settled Dhurwa families, while

the remaining fifty-seven families belong to the Cobra clan, are believed to have originally settled in the village of Marenga. Forming for all intents and purposes, the central core of the Dhurwa community in and around the village of Marenga, these fifty-seven Dhurwa families who regard one another as consanguineally related, dominate the village in all its walks of life, not only because of their large size but also due to the fact that they hold all the important offices, both sacred and secular, in the village of Marenga. It is this group which organizes and initiates all the rituals which are conducive to the fertility of land and welfare of the whole village. The whole Dhurwa society may, thus, be divided into two large-scale divisions, namely, those constituting the consanguines (Toler Vaub) and those included as the affines (saga). This bi-partition of the Dhurwa society at the village level may be tabulated as follows:

Toler Vaub	Saga
57 families of the originally settled Dhurwas of the Marenga village belonging to the Cobra clan.	The single family belonging to the Tortoise clan, settled in the Marenga village.
7 families of the recently settled Dhurwas of the Marenga village belonging to the Cobra clan.	19 families belonging to the Tiger clan, settled in the Marenga village.
	10 families of the recently settled Dhurwas of the Marenga village belonging to the Cobra clan.

The originally settled dominant group of the fifty-seven Dhurwa families of the Marenga village are further divided into two localized segments, namely, the Tippin Palias (i.e., those living in the Tippin Pal hamlet of the village) and the Marenkherias (i.e., those belonging to the Marenga village proper). The Cobra-affiliated Tippin Palias consisting of the seven families (and comprised under two lineages) will be discussed later on; in the meantime, we may mention that the Marenkheria segment consists of fifty families which are grouped under a number of patrilineal descent groups, locally called Jama or Kul. Following Lowie (1952 : 236) we may term the Jama (or Kul) as the 'kin group' for the members affiliated to Jama or Kul (unlike the lineages) merely believe 'in a community of descent' without being able to count exact descent or to trace their genealogical connections to their founder who remains quite often unnamed. A kin group among the Dhurwa consists of a cluster of lineages, but a Dhurwa does not distinguish a lineage from a kin group, for the relationship between the Ego and the person belonging to either of the social groups (namely the lineage and the kin group) is that of consanguinity (Toler Vaub or Kutamb) with

the result that no marriages would normally take place among the members belonging to the various kin groups (or the lineages) existing within the dominant group of the Cobra-affiliated (originally settled) families in the village of our study. Furthermore, a kin group should be theoretically speaking, a localized group, but not all the (male) members belonging to the particular Jama (or Kul) are found to be living in a single village. As will be presently shown, the various kin groups take their respective denominations from the particular rituals performed by the group as a whole and have different myths of origin. Then, each of kin group is associated with a particular shrine of its own as well as is provided with a specific portion in the burial ground in the village. The following are the kin groups which are found in the Marenga village:

Neutak	:	11	families	grouped under	3	lineages
Pelac	:	3	,,	,,	3	,,
Borka	:	19	,,	,,	5	,,
Kicek	:	13	,,	,,	4	,,
Dora	:	4	,,	,,	1	,,

So far as the myths concerning the origin of the above-mentioned kin groups are concerned, it may be mentioned that the progenitors of the Neutak Jama, namely, Moi Nanga and Ir Nangi, were found by the forefathers of the Dhurwa Cetia (or caste headman) of Tongpal in a cave which is reported to be situated near the foot-hill of the Dangar Candi in the Marenga village. These progenitors of the Neutak Jama were the first to be settled by the Cetia of Tongpal in the village of Marenga. They were followed by the (unnamed) founder of the Pelac Jama who is said to have originally hailed from Chopel near Pondum village. It was this man who was entrusted by the forefathers of the Neutak Jama (with the concurrence of the Cetia of Tongpal) to act as the village priest (pelac). The respective progenitors of the Borka and the Kicek kin groups are believed to be orphans (*porta*) having come from Kakalgar, and Chikpal villages, respectively. It was to relieve the pelac of his sacerdotal duties that the respective progenitors of the Borka and Kicek kin groups were entrusted with the work of cooking (*borka*) the ceremonial food and kindling the fire (*kic*) by means of bamboo sticks in the common village shrine(s). All that is known about the Dora Jama is that its (unnamed) progenitor had migrated from Geedam village; and it is this kin group that exercises, first of all, the right of offering rice and chicken or pig to the principal deity of the village. It may be mentioned that the descendants of the Neutak Jama are expected to arrange for the collection of the

mahua, rice and cash money from different households living in village, so that the distilled liquor and cooked rice may be served to the pelac (village priest) when he returns back to his house after sowing the consecrated rice seeds in his fields. The village priest belonging to the Pelac kin group, too, performs the important rituals in connection with the sowing of the consecrated rice seeds, hunting and eating the first mangoes in the common village shrine. Similar is the case with regard to the Borka, Kicek and Dora. In short, no common village ceremony or ritual is complete without the specific presence of any of these kin groups who are assigned definite functions in this regard. It should be pointed out that these ritualistic functions are performed only by the male members belonging to the various kin groups (Jama or Kul).

In addition to the above-mentioned functions, each of these kin groups is associated with a shrine of its own in the village; furthermore, the priests (*pujaris*) as well as the mediums (*sirah*) attached to the respective shrines belong to the same kin group to which they are associated through their shrines. It may be remarked that while these sacerdotal offices are open to any male member belonging to the same kin group, it is usually the pujari associated with the particular shrine who represents his particular Jama on those occasions when the ceremonies are observed in common shrines of the village. Significantly enough, about a decade or two ago, the members belonging to the Neutak kin group have built two more shrines in the village, in addition to their original one, with the result that we find that this particular kin group is split in three branches, each being represented by a separate shrine, having its own priest and medium. More of it will be discussed in the chapter on Religion; in the meanwhile, it may be stated that over and above these distinctive marks of recognition, each of the above-mentioned kin group is allotted specific portions in the burial ground (*canjkul*) which is used exclusively by the Dhurwa of the village. It may be added in this connection that not only the burial grounds are separate for different caste groups inhabiting the village of Marenga, but also distinction is maintained in so far as the Dhurwa are concerned for the burial of the dead persons according to their affiliations to the respective kin groups.

So far as the Tippin Palia segment of the Cobra clan is concerned, their (unnamed) progenitors are believed to have been born in a (dry) well which is said to lie within the confines of the village of Marenga, adjacent to the perennial stream of the Baru (Zairam). After being rescued from the well by the fore-

fathers of the Cetia of Tongpal, they were settled in the Tippin Pal hamlet. Like the Marenkheria segment, the Tippin Palias also possess a separate shrine of their own, called Hinglajin Mata, where the annual ceremonies connected with the sowing of consecrated rice seeds, etc., are performed by their own priest. While they, too, have their own functionaries, in so far as the annual worship is concerned, but, in contrast to the Marenkherias, some of their functionaries belong to other groups than their own. For instance, the office of the Dora belongs, at present, to a Dhurwa affiliated to the Tiger clan, while the Borka was previously a Kallar, though at present, the two offices of the Borka and Kicek are combined in one person who belongs to the Tippin Palia segment. The Tippin Palia segment is found to be localized, at present, within the confines of the Tippin Palia hamlet of the village, while the Marenkheria segment, though mostly found in the Dhurwa Para of the Marenga village, is spread in all the hamlets of the village in question (including the Tippin Pal Para). Like the Marenkherias, the Tippin Palias also have a separate burial ground, lying in the immediate vicinity of their present habitat.

Mention may be made in this context that in some other Dhurwa villages, it was found that for performing the ceremonies in the common shrine, the functionaries included, besides the Pelac, the Borka, the Kicek and the Dora, the Phanek and the Gaded—the former was required to sing and play the musical instrument on the ceremonial occasions, while the latter was expected to arrange for and collect milk on these commonly observed ceremonies and festivals.

Reference has already been made that the fifty-seven (Dhurwa) families affiliated to the two segments of the Cobra clan of the village, who form 60 per cent of the total number of the Dhurwa families settled in the village of our study are believed to have been the original settlers (mati log). The result is that no ceremony or festival in the village can take place without the active and whole-hearted co-operation of this dominant section of the village population. For that matter, nobody can settle in the village of Marenga without their specific permission. If any person who has recently settled in the village dies, then, the site for the burial ground within the confines of the village can be granted, of course, on their behalf, by the Pelac or the Neutak functionaries. Moreover, the important sacred office of the Pelac of the village is held exclusively by the (male) members belonging to the Marenkheria and Tippin Palia segments of the Cobra

clan of the village. Similar is the case in respect to other priestly offices (pujari) associated with the respective shrines of the village. With regard to the secular offices of the *kotwal* (watchman) and the Patel (headman), while the office of the kotwal usually is held by the Mahara caste-group (though a Dhurwa belonging to the Neutak Jama was engaged as the kotwal for about six months or so), the office of Patel which is selected by the villagers, as a whole, subject to the approval of the *Tahsildar*, has been held for the last fifty years or so from the Marenkheria and Tippin Palia segments of the Cobra clan of the (Marenga) village.

In the light of what has been stated above, it is evident that the dominant (Cobra) clan of the village not only enjoys the rights and duties but also acts and meets as a unit in day-to-day life as well as on other ceremonial occasions of the village under our study. Mention may be made in this connection that the members of the (affinal) Tiger clan, living in the village. also carry on many activities in common as a single group. It is not only once a year that they meet in their shrine of Bairam Dev Gudi, but their common ties are renewed on such occasions as the purificatory rites performed when a member belonging to their group is to be re-admitted in their fold for the breach of social norm.

Let us now examine as to how far the various Dhurwa clans function as exogamous units in actual practice. The following table would show the number of marriage connections entered into by the Dhurwa of the village of Marenga, past and present, belonging to the three clans of the Cobra, the Tiger and the Tortoise :

Clans	Cobra	Tiger	Tortoise	Goat	Rami	Bison	Non-Dhurwas	Unknown	Total
Cobra	129	106	40	8	3	3	2	111	402
Tiger	34	—	3	—	—	—	—	13	50
Tortoise	2	—	—	—	—	—	—	1	3
TOTAL	165	106	43	8	3	3	2	125	455

Significantly enough, out of 455 marriages recorded by us in the village of Marenga, the clan names of as many as 125 mates (forming 27 per cent of the total marriages) remain unknown to our informants. As already pointed out, the members belonging to the Tiger and the Tortoise clans, settled in the village, regard one another consanguineally related, but the fact is that three marriage connections which have been entered between the members affiliated to the Tiger and Tortoise clans show that the rule relating to consanguineal relationship has been violated, though

it is worthwhile to point out that these marriages were entered outside the village of Marenga. Apparently, only on the village level, these two clans regard one another as "brother clans" for purposes of marriage and in terms of kinship usages. It is interesting to observe that no marriage is reported to have taken place within the village among the members belonging to the Tiger clan and those affiliated to the Goat clan or the Tortoise clan or the Rami (bird) clan or the Bison clan—all these clans being lumped together and collectively referred to by the two segments of the Cobra clan of the village as their affinal kinsmen (saga).

While all the Dhurwa clans, as a rule, prohibit marriages taking place within the same clan, curiously enough, it is only among the Cobra clan that violations of the rule of clan exogamy number as many as 129 which forms 43 per cent of the known marriage connection of the village. It may be added in this connection that, in the beginning of our study, the informants tried to cover these anomalous cases by giving (what turned out to be) incomplete information about the clans of their mates; but ultimately it was agreed by them that these cases involved violations of the rule of clan exogamy with implications of incest. The question arises as to how these breaches (which appear to have been accepted for all intents and purposes as normal, and hence may be taken as socially approved) are explained by our reliable informants. Before we present their explanation, we must refer to those Cobra-affiliated Dhurwa families, numbering ten, which have recently settled in the village of Marenga from outside. As many as ten marriages have connected these ten families with the various kin groups (Jama) of the Marenkheria segment as well as the Tippin Palia segment of the village. It is worthwhile to point out that not a single marriage has been performed between these ten families and the families affiliated to the Tiger clan and the Tortoise clan of the village. The reason given is that these ten Cobra-affiliated families are regarded as the consanguines of the Tiger and Tortoise affiliated families living in the village under our study.

Let us, finally, examine the explanation which is offered to account for the large number of the socially approved breaches of the rule of exogamy. It is important to mention that the Dhurwa men and women, by and large, accept these breaches as traditionally sanctioned and appear to attach no importance to such marriages. All that they want us to believe is to the effect that their kins by marriage are commonly referred to by the term of

Saga. And so, if (for example) the informant is affiliated to the Cobra clan, his or her affinal kins would more often than not belong to the Tiger clan. It is only when the particular affinal kin asserts that he or she belongs to the same clan to which the informant belongs, then both persons feel perplexed to explain such an anomaly. But, while most informants lose all interest in the subject under discussion, a few of them vaguely remember that there is found among the Cobra-affiliated Dhurwas a large social group, called the Burtu Nang, which incorporates within itself the smaller group, termed the Shukul Nang. It has already been made clear that the Dhurwa society, by and large, is divided, for purposes of marriage and on the basis of kinship terminologies, into two basic units, viz., the consanguines (Toler Vaub) and the affines (Saga).

In the light of the aforesaid facts, it may be suggested that the larger social group said to have existed among the Cobra-affiliated Dhurwa (Burtu Nang) may possibly refer to the Cobra-moiety which included the Cobra clan (Shukul Nang) as well. If so, then, the complementary moieties among the Dhurwa originally were the Cobra (Nang) and their affines which are collectively referred to at present under the generic name of the Tiger (Du or Bagh). Quite possibly, the exogamous feature connected with these two inter-marrying moieties has disappeared in course of time with the result that the fellow members of the Cobra moiety who regarded one another once as consanguines are at present free to marry among themselves—marriage being prohibited now only within the Cobra clan. Mention may be made in this connection that according to Lowie (1950 : 243), when a prosperous moiety grows so large that its members lose a sense of kinship or find it greatly weakened, agamy develops as a sequel to exogamy in a dual organization. While discussing the dual organization among the Bondos, Elwin (1950 : 37) has similarly concluded that "in the Cobra and Tiger bisection of Bondo society a relic of a genuine dual organization is found". He has also noted that the two moieties of the Bondos, namely, the Cobra (Ontal) and the Tiger (Killo or Kukusa) hardly serve their exogamous purposes simply because of the original division of the Bondo society in dual organization is very old and half forgotten.

Family Units and Lineages

A family in the village of Marenga (as also in other villages) may be defined primarily in terms of a common hearth and a common purse, for the members of a family not only work together

in co-operation with one another but also they meet their every-day expenses from the joint fund as well as prepare their meals in a common hearth. What is more, a family normally occupies a single habitation (ole or ghar), and hence the family is locally called by the term of ole or ghar. When a married son in the family, for instance, desires to live separately from his parents, the internal partition of the house does not usually take place, but he goes out and constructs a new house. In a few cases, however, when two such families were found to be living in a single homestead, these were regarded essentially as make-shift arrangements, for the seceding member would shift to a new house as soon as it would be ready for occupation. It is interesting to mention that opposite forces were also observed to be at work in two cases where separate families living in disparate dwelling houses later on combined together to form a single household. The first case is concerned with a Dhurwa male who was living with his wife and unmarried children, while his married son from his earlier (dead) wife was living separately with his uterine (unmarried) sister. After living separately for about two years, they broke down their respective houses and started living together in a newly built house as a single family unit. In the second case, a Rawat having two wives was living in a separate house with his younger wife and their unmarried children, while his older wife with her married son and other unmarried children was living in a separate house. After the death of the said Rawat, both these disparate families started living together in a common house as a single family. Barring these cases, it may be stated that in the Marenga village a family customarily lives in a single habitation, and since the occupants of a single habitation (or homestead) constitute a household (Notes and Queries : 64), so a family and a household may be taken as interchangeable terms.

During our census work in February, 1958, we have found family units of various types in the village of Marenga. Broadly speaking, these may be grouped under three types, namely, (i) simple family consisting of the parents living with their unmarried children, (ii) joint family consisting of the parents living together with their married sons and unmarried children, and (iii) miscellaneous family which can neither be called simple nor joint but includes such cases where the death or absence of a child renders the family incomplete.

Before analysing the family types found among the Dhurwa living in the village of our study, it will be useful to mention a few words about the types of family units existing among the

non-Dhurwas settled in the village of Marenga. There are two families belonging to the (Bison-horn Maria) Lohar who are said to be settled in the village for the last twenty years or so, having migrated from Zirampal and Pakela, respectively. These two families are basically the Simple family units, but due to the addition of the wife's siblings and husband's half-sibling in the respective families, these are grouped under the Miscellaneous type of family. Regarding the two families of the (Bison-horn) Maria, the respective heads of these families have shifted in the village of Marenga a generation back from Muskil and Pondum ; but while one family is of Joint (family) type, in the case of another family the (widower) father lives in the otherwise basically Simple family of his son and so falls under the category of the Miscellaneous type. Of the three Bhatra families settled in the Marenga village on different occasions, one is a (Bhatra) widow of a Kallar, whose two sons died one after another, the other is living with his two (Rawatin) wives, without having any children, while the third household is a Joint family unit. Three (Andiyan) Mahar families are said to have originally shifted from Mahakpal, Gadampal and Kokawada villages, respectively ; but while two of these families belong to the Simple family type, the third family consists of a widow sister and unmarried brothers living in the otherwise Simple family of their married brother and hence has been grouped under the Miscellaneous type of family. So far as the seventeen Rawat families of the village are concerned, while twelve of them are affiliated to the Tortoise (Kacheem) clan, three of them belong to the Tiger (Bhag) clan, and two of them being grouped under a single lineage has settled from Pakela village and is affiliated to the Lizard (Ghoi) clan. The members belonging to the first two clans are believed to have settled in and around the village of Marenga since a long time back, but it is the numerically large Tortoise affiliated members who regard the Tiger and Lizard affiliated members as their affines (saga). An interesting feature of the family organisation of the Rawat is that not even a single family belongs to the Joint family type. Eleven are grouped in the Simple family type, and the remaining six families are included under the Miscellaneous type, while in two cases the deceased brothers' sons of the respective heads of the family are living with their father's brothers, in other cases, the widow mothers are living in the respective families of their sons, one unmarried (leper) brother is living in the basically Simple family of his brother and a mother who resides separately from her husband is living along with her married son and other unmarried children.

With regard to the Dhurwa families living in the village of

Marenga, it may be remarked that they possess not only the Simple family type but (in contrast to the Rawat family organization) Joint family type also. What, however, is of particular interest to note is that the kin composition of as many as 41 families (out of 94 Dhurwa families of the village of Marenga) is such that these families neither belong to the Simple nor to the Joint (family) type ; hence may be included under the category of the Miscellaneous family type. The following are some of the noteworthy cases of this type :

1 A widower living with his unmarried children, and his own widow mother and widow step-mother ;

2 Widow mothers living in the respective families of their sons along with their unmarried/widow/divorced daughters and sons ;

3 Married daughter along with her spouse living in an otherwise Simple family of her father ;

4 A widower related to the head of the family as the classificatory father's brother and the widow mother of the wife of the head of the family living in an otherwise Simple family units ;

5 An otherwise Joint family containing, among other relatives, a married (classificatory) daughter of the head of the family and her spouse ;

6 An otherwise Joint family consisting of the (widower) father, his (two married sons with their respective spouses, his brother's married son along with his spouse, his own unmarried daughter and brother's unmarried daughter, the unmarried (step-) children of his own married son, and the widow mother-in-law of his own son—in all 14 members ;

7 Childless married couples—no child born to the wife till then, or, the child was born but had died by then, thereby rendering the family incomplete.

The following table which is arranged ethnic-wise in so far as the village of Marenga is concerned, summarises the three major types of family units :

Types of family units	Dhurwa	Rawat	Mahar	Bhatra	Maria	Lohar	Total for the village
Simple	40 (42·55%)	11	2	—	—	—	53 (43·80%)
Joint	13 (13·83%)	—	—	1	1	—	15 (12·40%)
Miscellaneous	41 (43·62%)	6	1	2	1	2	53 (43·80%)
TOTAL	94	17	3	3	2	2	121

The above table shows, firstly, that at least 42 per cent of the Dhurwa families living in the sample village of our study are characterized by what has been termed Simple family type The importance of the Simple type of family also becomes clear when (as will be explained later on) it is realized that the kinship terms used for one's own father and mother are not diffused among a number of relatives but are meant for specific individuals only. In the second place, the typical Joint family type is conspicuously absent among the Rawat and other groups, but at least 13 per cent of the Dhurwa families have this type of family organization. Reference has been made as to a few cases where two families were found to occupy a single homestead ; but as already pointed out, these cases represent the married sons who were living in the single homestead of their respective fathers, more or less, as a temporary measure. The normal practice among the Dhurwa as well as the Rawat is that the married sons start living separately in the lifetime of their respective fathers. But, as it is obvious from the number of the Joint family units, this norm is not strictly adhered to among the Dhurwa. For such cases arise, when the parents make it a point to see that their only son continues to live with them after his marriage, even after the birth of a child, or on account of the advanced years of the parents, one of the married sons feels that he should look after them as well as manage the common land. However, it is left ultimately to the convenience of the married son (and his wife) whether they would prefer to stay with his parents, though the chances are more for him to lead a separate family life. Even such cases were observed when the father would help his married son to construct the new house for his dwelling. For that matter, there are a number of (incomplete) family units which have been included under the category of Miscellaneous family type, where the married sons had separated from their parents soon after their marriage and were living in the houses of their own. It may be added that throughout the village no such family was found by us where two married brothers lived jointly after the death of their father ; but that does not mean that the widow mother or other relatives, whether unmarried or divorced or rendered widow, do not stay in the respective family units. In fact, a large number of the Miscellaneous type of family organization indicate that the doors are always open to their kins—even the distant consanguines as well as the affines, who have nowhere to go and none to give shelter, are free to live more or less permanently in the different family units.

Let us now note the optimum family size for different ethnic

groups living in the village. The following figures speak for themselves:

Average number of persons living in a family (for the village, as a whole)	5·16
" " a Bhatra family	4·00
" " a Rawat "	4·29
" " a Mahar "	5·00
" " Dhurwa "	5·30
" " a Lohar "	6·00
" " a Maria "	7·00

Since the average figures do not reveal the actual conditions, so the number of persons actually living in a family (or household) is noted below for the village, as a whole, as well as separately for the Dhurwa:

Number of persons actually living	In the village among the families	Total persons	Dhurwa families	Total persons
1	1	1	—	—
2	11	22	11	22
3	16	48	10	30
4	20	80	14	56
5	23	115	16	80
6	18	108	14	84
7	21	147	20	140
8	3	147	2	16
9	4	36	3	27
10	3	30	3	30
14	1	14	1	14
TOTAL	121	625	94	499

It may now be stated that out of 94 Dhurwa families living at present in the village of Marenga, as many as 24 families have settled one to two generations back from villages varying at distance from one to thirty miles from the village of our study, partly in search of land and partly because the village of Marenga happened to be the natal village of their respective mothers/wives, as the following list shows:

Number of families	Original village	Remarks
1	Chindawada	Settled in the village two generations back from the present head of the family in search of land.
5	Kinderwada	While the head of one family settled in his wife's father's village, the remaining four families comprised under one lineage had settled a generation back in mother's father's village.
1	Kokanar	Widow with her unmarried children returned to her father's village.
1	Littiras	The head of the family settled in the village in search of land.
1	Marjum	Settled in the wife's father's village a generation back from the present head of the family.

Number of families	Original village	Remarks
5	Moriapal	Settled in the step-father's village a generation back from the present head of the family.
1	Rengawada	Settled in the wife's father's village a generation back.
6	Tahakwada	While two families settled in the mother's father's village two generations back, other four families settled in the wife's father's village a generation back.
2	Tongpal	While one family settled in the village in search of land, in the other case, a widow returned to her father's village.
1	Tulsi	Settled in the village in search of land.

The above-mentioned twenty-four Dhurwa families settled in the village of Marenga a generation or two ago include one Tortoise-affiliated family, six Tiger-affiliated families and seventeen Cobra-affiliated families. The remaining seventy Dhurwa families which are believed to have settled in the village of our study since a long time back, include thirteen Tiger-affiliated families and fifty-seven Cobra-affiliated families. While the members belonging to the originally settled (57) Cobra-affiliated families of the village consider themselves as consanguineally related kins, but only seven of the recently settled Cobra-affiliated families are included in the same category of consanguines, the remaining ten families being treated for all intents and purposes as their affines. So, then, the final picture that emerges is that while sixty-four Dhurwa families affiliated to the Cobra clan are consanguineally related to one another, the rest of the thirty families are counted as their affines. This bi-partition of the Dhurwa society at the village level has already been discussed.

What, however, needs emphasis in this regard is that the originally settled fifty-seven Cobra-affiliated Dhurwa families are divided into two localized groups, namely, the Marenkherias and Tippin Palias, each having a separate shrine and a burial ground. The numerically larger group of the Marenkheria is further segmented into a number of "kin groups" (Jama or Kul) ; and each Jama, in its turn, consists of lineages which vary both in size and depth. The Tippin Palia group though similarly segmented into a number of lineages is not comprised within the "in groups". It may be added that while all the Dhurwa families, whether they have settled in the village recently or not, are found to be constituted into well-defined lineages, but it does not matter to a Dhurwa whether his (consanguineally related) kins are genealogically traced or not, for they refer their kins in the Jama (or Kul) as well as the lineages by the same term (and treat them as such), namely, Kutamb or Toler Vaub in contradistinction to the affinally

related kins. So, then, the consanguineal relationship existing among different "kin groups" is (unlike the lineages) merely assumed; but since, it is actually believed, so the kin groups are (like the lineages) characterized by exogamy. The only case that violated the exogamous rule in this connection may be explained with the help of the following chart:

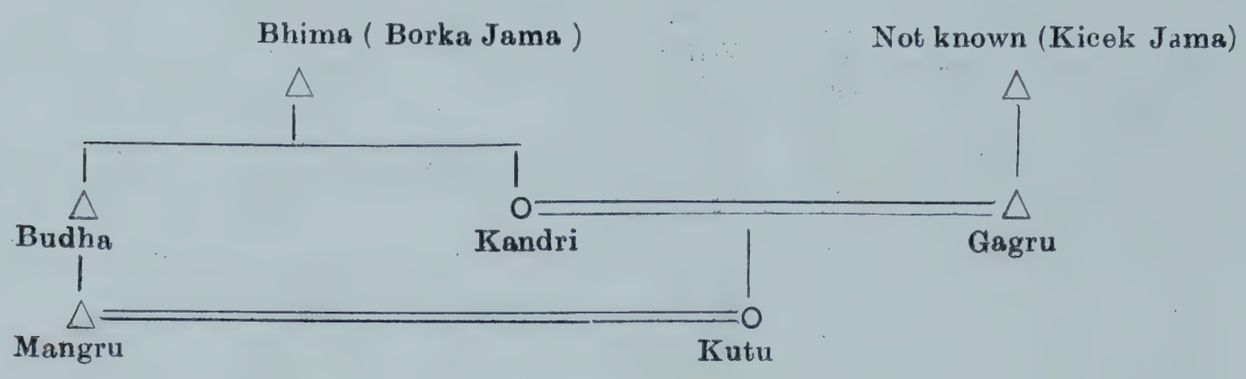

Evidently, the marriage between Gagru and Kandri who were related to each other as the (Kutamb) brother and sister, was in violation of the exogamous rules, or what comes to the same thing, the extended incest taboos (Murdock, 1949 : 301). But no serious notice seems to have been taken for their matrimonial alliance, inasmuch as in the succeeding generation their daughter, Kutu, was married in accordance with the traditionally approved form of cross-cousin marriage, locally called Guda, whereby the daughter is to be returned back to her mother's family of orientation by marrying the son of her mother's brother. It is worthwhile to point out that the marriage of Kutu with her cross-cousin, Mangru, ended after a while in a divorce on the ground that both the partners were always conscious that they were essentially related to each other as brother and sister; thus by marrying each other, they not only violated the (extended) incest taboos but also were responsible for creating all sorts of confusion on the levels of kinship terminology and behaviour pattern. It may be noted that this attitude of them was in marked contrast to that shown by Gagru and Kandri, who, it is said, had developed their intimacy on the occasion of Gurgal (Kurwal) dance and continued to live as husband and wife.

Apart from this solitary instance, no other case was reported to have violated the rule of exogamy in so far as the relationship within the kin group is concerned. In any case, a lineage or the larger unit, viz., kin group, includes the dead members, and, what is more, some of its members are found to have settled outside the village of our study. So, for practical purposes, a lineage or a cluster of lineages (termed a Jama or Kul, in so far as the

Marenkheria group is concerned) consists essentially of a number of families of different types. Ideally, all the members of a lineage or kin group should meet on such occasions as the birth, marriage and death of their members ; but it all depends on the conveniences of the members concerned. A group of lineages often have a common priest who is usually succeeded by his son, although any (male) member of the concerned group may represent him in his priestly functions. Generally, it is the more energetic male members of a lineage group who represents the lineage in the village meetings as well as in the annual ceremonies of the village. It was also observed that quite a number of men belonging to particular lineages occupy adjacent households round a common kitchen garden and live with their wives who come from within or beyond the village of our study, as the case may be. So far as the ownership of the (agricultural) land is concerned, it may be remarked here that while some of the larger lineages contain a number of tenure-holders who distribute the agricultural fields (unequally through, as will be mentioned later on) amongst the component families of the lineage group, the smaller lineages with fewer branches and less depth than the larger ones have a single tenure-holder who holds the land for the (localized) lineage group as a whole. Whatever may be the size and depth of the lineage group, the component families comprised within the particular lineages though not owning any definite share of the common agricultural holding, cultivate their respective allotted portions and enjoy the fruits of the harvest, as basic economic units. And in view of the fact that there is a growing demand for the individually owned agricultural holdings in the village (as also in other villages), it may be said that the basic family units in which a person is born and brought up appear to be more significant than the lineages. For that matter, the traditionally approved marriages, too, are now being arranged by the respective families, but previously such marriages were the concern of the lineages (or the " Kin group ") as a whole.

Mention may be made in this context that the family unit, whether Simple, Joint or otherwise, among the Dhurwa as well as for other ethnic groups living in the area of our study, is based on patrilineal descent, that is to say, a person is affiliated to his father's family. The residence rule among them, also, is patrilocal, whereby a woman upon marriage takes up her residence in her husband's home (or village), though in a number of cases residence has been selected by the male members in the natal villages of their mothers or wives. It may also be added that the household or a family forming a segment of the lineage (or a kin

group) essentially revolves round the central core of the menfolk, while the womenfolk, being married, join their husbands and return permanently to their natal homes on such occasions as divorce, separation or (in some cases) death of the husband. In the Simple family units, it is the father who uniformly acts as the head of the family. It is he who controls the family finances as well as speaks for the family. In a Joint family unit, it is generally the oldest male member who is regarded as the head of the household (or family). It is he who co-ordinates the day-to-day activities of its members, as also controls the family resources. In the case of widows with minor children, the oldest male member belonging to the lineage group normally acts as her *de facto* head. The role of the married women in different households "centres largely on their functions connected with house-keeping, acting more in advisory capacity than in an authoritative capacity". Although a woman is debarred from attending the periodical village meetings or the religious ceremonies, still, as a mother, she commands respect (man) and is obeyed by her young children. Regarding the child-rearing practices, both the parents show their concern with regard to the eating habits, toilet training and sexual matters of their children, although with the growth in years the training of the sons rests primarily with their father while a mother is held responsible for her daughter's conduct and actions.

Voluntary Groupings

The voluntary groupings may be placed for the sake of convenience under two categories, namely, territorial and associational. Starting from the smallest possible unit of the first category, viz., domicile, we have already noted that it consists in the area of our study of the ole and (in most cases) of the char, surrounded by a closed courtyard (veli) with a kitchen garden lying adjacent to it. A domicile or a homestead is customarily occupied by a single family or household, which may be Simple, Joint or otherwise ; but seldom do we find two households living in a single habitation area (or domicile). While caste-wise distinctions are not generally maintained in the arrangements of houses, still the houses belonging to the Maria Lohar and the Mahar are built at a distance from the Dhurwa householders. We have also discussed in the Settlement Pattern of the (Marenga) village such intermediate units as (five) hamlets (para) which have distinct names of their own and are recognized by the villagers as the discrete (areal) units, though on certain occasions and for other social purposes, the village of Marenga is divided into two main sub-divisions. However, the unity of the village of Marenga

emerges not only because it is represented by a single headman (patel) but also when the village, as a whole, participates in the annual fair-festivals whether held within the village or at the Pargana level. Regarding its extensions, the village of Marenga is tied to three neighbouring (Dhurwa) villages in so far as these (four) villages combine together to perform their annual ceremonies connected with rice seed sowing, hunting and new mango eating, in the common shrine called Bhandarin Mata. More of it will be discussed later on ; enough it to state that so far as their caste Panchayat is concerned the Dhurwa of Marenga village recognize (along with the Dhurwa living in five neighbouring villages) the Cetia of Tongpal as their headman (naik). Traditionally, the village of Marenga is grouped (along with other thirteen villages) under Hamirgarh Pargana which constituted in its turn as one of the sub-divisions of the Sukma Zamindari.

Concerning the voluntary groupings, it may be stated that for the last fifteen years or so, a group of Dhurwa young men of the Marenga village have entered into quasi-kinship relationship through friendship (boinda saga) with the Bison-horn Maria (Boyil) counterparts living in Chikpal, Percil and Korrepal villages. Quite often, the Dhurwa of Marenga village attend, both as buyers and purchasers, the distant weekly markets of Paknar and Kattakalyan, and are required to pass night in such villages as Chikpal, etc. Since there is no Dhurwa living in these villages, so it was found convenient by them to enter into this sort of friendship with the Boyils of the aforesaid villages. Similarly, the Boyils on their way to attend the Leda market or other distant villages find it convenient to halt in the Marenga village. Thus, it is purely on grounds of convenience that the male members belonging to two respective ethnic groups have entered into friendship which appears to be continuing for a number of years. But no ceremony solemnizes this friendship ; only the persons concerned are allowed to pass their night in the houses of their counterparts, when they are supplied rice and pulse ; and occasionally chicken and intoxicating drinks like sulphi, rice beer or distilled liquor are mutually exchanged. They are also invited on such occasions as marriage, death anniversary, etc. The following Dhurwas of Marenga village have entered into this sort of friendship :

Mahengu	with a Boyil	of Percil	village	since 10	years
Jitru	,,	,,	,,	12	,,
Bitu	,,	Korrepal	,,	15	,,
Mahengu	,,	Chikpal	,,	2	,,
Diaru	,,	Korrepal	,,	2	,,

Pandru	with a Boyil of	Korrepal	village since	5	years
Mahengu	„	Chikpal	„	5	„
Lekhma	„	„	„	10	„
Kutal	„	Paknar	„	7	„
Sonu	„	Chikpal	„	8	„
Hari Singh	„	Korrepal	„	2	„

KINSHIP

The terminologies employed by the Parji-speaking Dhurwas show that the parents of the Ego are distinguished from their siblings by being designated by separate terms, e.g.,

Fa.....Tata	Mo.....Iya
Fa El Br.....Pepa	Mo El Si.....Pepa
Fa Yr Br.....Kaka	Mo Yr Si.....Kaki
Fa Si.....Anya	Mo Br.....Mama

Thus, irrespective of sex of the speaker, separate denotative terms are employed in the first ascending generation of Ego for Fa and Mo. While the criterion of relative age is ignored in the case of the siblings belonging to the opposite sex of the parents, the siblings of the same sex are differentiated on the basis of their relative age, though, again, the criterion of sex is not recognised in the case of the elder siblings (of the same sex of the parents), for both these relatives are grouped together under the identical term of Pepa. In the first descending generation, the criterion of sex of the speaker as well as that of the designated relative is taken into account. Thus one's own children and those of the siblings of the same sex are grouped together but they are distinguished from the children of the opposite sex as shown below:

One's own So/Da and Br So/Da (M.S.)
„ „ Si „ (W.S.) } Chind/Mal

Si So/Da (M.S.)
Br „ (W.S.) } Bacha/Bachi

In the Ego's own generation, the parallel cousins are classified together with one's own siblings, but remain distinguished from their cross-cousins. By recognizing the criterion of relative age, the elder siblings (along with their parallel cousins) are differentiated from their younger ones, while among the elder siblings and their parallel cousins distinction is further made on

the basis of their sex. The younger ones are, however, designated by separate terms, depending on the speaker's sex. The respective terms are shown below:

El Br	Dada	El Si	Bai
Yr Br (M.S.)	Toled	Yr Si (M.S.)	Calal
Yr Si (W.S.)	Toda	Yr Si (W.S.)	Calid

With regard to the cross-cousins, it may be said at present stage that regardless of the sex of the speaker or of the relative referred to, the relationship is that of Ail which is reciprocally employed by the relatives concerned.

In the second ascending generation, terminological distinctions are made as a result of the recognition of the criterion of affinity between the cosanguineal relatives (Toler Vaub or Kutamb) and the affinal relatives (Saga). Thus, FaFa (Dadi) is distinguished from Mo Fa (*Akka*) ; so also are their respective spouses designated by separate terms (viz., *Avva* and *Bai*). These terms are, however, extended to cover the siblings of the same sex of the grand-parents ; thus Dadi is extended to Fa Fa Br, Akka to Mo Fa Br, Avva to Fa Mo Si and Bai to Mo Mo Si. In the second descending generation of the Ego, the Dhurwa distinguish their agnatic relatives from their sisters and daughters' sides. But by ignoring the criterion of polarity, the same term is used reciprocally for one another by the relatives placed in the second ascending and second descending generations in the consanguineal and affinal (including the uterine) lines, respectively as shown below:

Dadi.....Fa Fa So So and So Da .....Kutamb kins
Akka.....Mo Fa Da So and Da Da .....Saga kins

It may, however, be mentioned in this connection that So So and So Da as well as the Da So and Da Da are also referred to by such descriptive terms as Chind Merva and Mal Merva, respectively. If the Ego is a female, she designates these relatives in her second descending generation by the above descriptive terms, while in case the Ego is a male, he too designates them as such, but he also refers his So So and So Da as his Yr Br (Toled) and Yr Si (Calal), respectively.

So far as the relatives in the higher ascending and descending generations are concerned, it may be said that by ignoring the criteria of generation and collaterality but by recognising the criteria of affinity and (partially) sex, the kinsmen related to the

Ego in different degrees are grouped together under a single classificatory term in the alternative generations as shown below :

				Kutamb kins Males	Kutamb kins Females	Saga kins Males	Saga kins Females
Ego's and	first third	ascending generation	,, ,,	Pepa	Pepa	Mama	Anya
Ego's and	second fourth	,, ,,	,, ,,	Dadi	Avva	Akka	Bai
Ego's and	first third	descending	,, ,,	Chind	Mal	Bacha	Bachi
Ego's and	second fourth	,, ,,	,, ,,	Dadi (Chind	Dadi Merva)	Akka (Mal	Akka Merva)

The following kins who are linked to the Ego through a female connecting relative are, however, terminologically classified with their consanguineal ones:

Mo Si Hu who is classed with Fa Br is designated by the term of Pepa or Kaka, according to his relative age, while their respective spouses are termed by the same terms. Likewise, Wi Si So and Da are referred to as one's own children ; so also are Hu Br So and Da referred to as one's own children. In the Ego's own generation, Wi (Hu) El Br is called Dada, while Wi (Hu) El Si is designated Bai, though the relationship term for the former is Porid and for the latter it is Poral.

The criterion of affinity is, nevertheless, recognised in those cases when the affinal relatives are terminologically differentiated by designating them with specific set of terms, namely, Wi is called Audey while Hu is termed Auded, and Wi (Hu) Yr Br is called Namayid, while Wi (Hu) Yr Si is termed Novel. Age-differentiating terms are also employed for the spouses of their siblings, namely, El Br Wi is called Andil, while Yr Br Wi is called Kodol, irrespective of the speaker's sex. Likewise, El Si Hu is called Namayid and Yr Si Hu is termed Calnid. Sibling terms are, however, used for the spouses of one's own cross-cousins as well as for the spouses of the Wi (Hu) siblings and their parallel cousins, after taking into account the criteria of the relative age and sex of the speaker. The criteria of the sex of the disignated relative as well as of the speaker are, also, recognised when the parents of the children's spouses are referred to as the Ail and Bai by a man, but as Dada and Andil by a woman.

Mention may also be made that in the first ascending generation of the Ego, although the paternal and maternal uncles and aunts are terminologically differentiated from parents, Mo Si is equated with Fa Br Wi, while Fa Si is equated with Mo Br Wi.

Thus among the several categories of relatives for whom the same term is employed, the following kins may be mentioned:

Kutamb kins			*Saga kins*		
1 Mo Si	=	Fa Br Wi	1 Fa Si	=	Mo Br Wi
2 Mo Si Bu	=	Fa Br	2 Fa Si Hu	=	Mo Br
3 Fa Br Da and So	=	Mo Si Da and So	3 Mo Br Da and So	=	Fa Si Da and So
4 Br Da and and So (M.S.)	=	Si Da and So (W.S.) =	4 Si Da and So (M.S.)	=	Br Da and So (W.S.) =
= Wi Si Da and So (M.S.)			= Wi Br Da and So (M.S.)		
= Hu Br Da and So (W.S.)			= Hu Si Da and So (W.S.)		

Significantly enough, the kin relationship between all these terminologically grouped relatives is not treated as a unit. For, while Fa Br designates his Br So and Da as his own children, the latter do not employ the reciprocal terms for Fa (Tata) but designates him as Pepa or Kaka. The criterion of polarity is similarly recognized in the relationship terms for Mo Si and her sister's children. However, it is clear that the children of the sibling of the same sex are referred to as one's own children and are distinguished from the children of the opposite sex. The former category of relatives of the Ego is regarded as consanguineals (Kutamb) and the latter as affinals (Saga). This sort of segmentation within the Dhurwa community whereby the relatives of the Ego are aligned either as the Kutamb or as the Saga is consistently reflected at different levels of generations as is evident from the above account.

In view of the fact that cross-cousin marriage is the preferred form of marriage among the Dhurwa of Bastar, Mo Br and Fa Si Hu are equated with Wi (Hu) Fa, while Mo Br Wi and Fa Si are classed with Wi (Hu) Mo, being called Mama and Anya, respectively. It may be added that the behaviour pattern associated with the relatives who are termed Mama and Anya is uniformly to quote Lowie (1950 : 68-69) that of "respect without avoidance".

In order to examine the behaviour patterns between the several categories of relatives, we may proceed by noting the important social functions exercised by Mo Br in a Dhurwa society. First of all, the marriage of a girl cannot be arranged without the permission of her Mama. As will be shown later on when dealing with marriages, a prospective husband's father seeking the hand of a girl for his son is normally required to approach the girl's Mama ; and it is only when compensation (Mama duita) is promised to be given to the Mama of the girl that the concerned girl can be married elsewhere. Secondly, on the death anniversary of a

Mo Br, his Si So is entitled to receive from the deceased's family Muar Cherana, which includes such articles as paddy, knife, bow and arrows, even bullocks. These socially-recognised functions set apart Mo Br as a person of authority in the social set-up of the Dhurwa of Bastar. With regard to Fa Si, the Dhurwa recognise what is called the Guda system, whereby when a girl gets married, it is expected that her daughter would be sent back in marriage to her (i.e., mother's) family of orientation. This form of patrilateral cross-cousin marriage strengthens the ties between the respective families of procreation of brother and sister In such interfamilial exchange marriages Fa Si who is terminologically equated with Mo Br Wi would become Ego's mother-in-law (Anya). Even otherwise, Fa Si has certain rights and obligations, e.g., she is entitled to receive cloth (*mai-luga*) on the occasion of the marriage of her brother's children, participates in the name giving ceremonies and death anniversaries in her family of orientation. Further, she is expected to bring with herself such articles as bobu, lai, landa, etc., for her brother's children, whenever she would visit her brother/father. In a word, both as Fa Si and as mother-in-law, she is treated with respect without being "avoided", although a son-in-law would not ordinarily look at his mother-in-law, nor would he joke in her presence. The same is the case with regard to father-in-law *vis-a-vis* his daughter-in-law.

The inter-personal relationship between the cross-cousins (especially of the opposite sex) is characterized by "the licensed familiarity", for not only joking but also teasing is played freely by them. But, it may be pointed out that as a result of the cross-cousin marriage system among them, it so happens that the concerned cross-cousin may become the Yr Br Wi (M.S.) or the Yr Si Hu (W.S.). In that case, the joking relationship between the erstwhile cross-cousins is transformed into that of "avoidance", for even their names are not mentioned, especially so by the womenfolk. In the case of Wi (Hu) El Br and Wi (Hu) El Si, formal restraint is mixed with that of respect, with the result that these relatives are recognised as belonging to a special category, inasmuch as most of the informants would hesitate to mention their names, much less talk freely in their presence. The attitude of "licensed familiarity", however, characterizes the relationship between the Ego and the spouses of his (or her) elder siblings as well as with the Wi (Hu) younger siblings. For that matter, the respective names for Wi (Hu) Yr Si and Wi (Hu) Yr Br, as also for El Sl Hu, are Navol and Namayid—both the terms having the prefix of Nav which means laugh. The same attitude is extended to El Br Wi who is called Andil, but she designates her

Hu Yr Br as Namayid and her Hu Yr Si as Navol. The same joking relationship is found to exist between such relatives as Mo Fa and his Da Da, and Mo Mo and her Da So and So Da. Quite often, an old man would be observed to tease his granddaughter (i.e., Da Da) by catching hold of her and addressing her as his spouse, while an old woman would designate her Da So as her Namayid and So Da as her Navol. Thus, the Akka terms denote warm and intimate relationship, being frequently accompanied by joking and teasing, between the affinal relatives of the opposite sex, who are placed in the alternative generations.

Quite opposite is the case with the consanguineal relatives who are placed in the alternative generations. No joking is allowed between Fa Fa and So So and So Da, though the former sometimes designates the latter as his Yr Br and Yr Si, while Mo Mo at times refers her Da Da as her Yr Si. In fact, the grandchildren (Dadi) are expected to behave properly by showing due respect to their grandparents (Dadi and Avva) ; but this attitude of respect is more free and spontaneous than that characterizes the relationship between the parents and their children. So far as the emotional attitude of a child to his parents is concerned, he or she is expected to obey and respect his or her parents, while the parents, in their turn, show great affection and indulgence to their children. Corporal punishment is occasionally meted out to their erring sons and daughters by either parents. It may, however, be pointed out that the parental authority is normally exercised so long as their children remain immature for seldom do the grown-up sons and daughters consult their parents with regard to their marital affairs. It is worthwhile to add that the relationship between a mother and her children is found, on the whole, to be more intimate and warm than that existing between a father and his children. Regarding the behaviour pattern with Fa Br and Mo Si, while the former is given more or less the same attention and regard that a father usually gets, the latter is treated for all intents and purposes as a mother. It is worthwhile to mention that a step-son (-daughter) is called by her step-father (mother) as Kud-Chind (Mal), but the step-child terms his step-father (-mother) as his Kaka (Kaki) - the same terms are used for Fa Yr Br (and Mo Yr Si). As indicated by the terminologies, the same functional difference is noted within the family between the elder brothers/sisters and their younger siblings. While the elder brother is expected to play the role of a father by guiding and disciplining his younger siblings, the elder sister acts as a mother by looking after and taking care of her younger brothers and sisters. The younger siblings, in their turn,

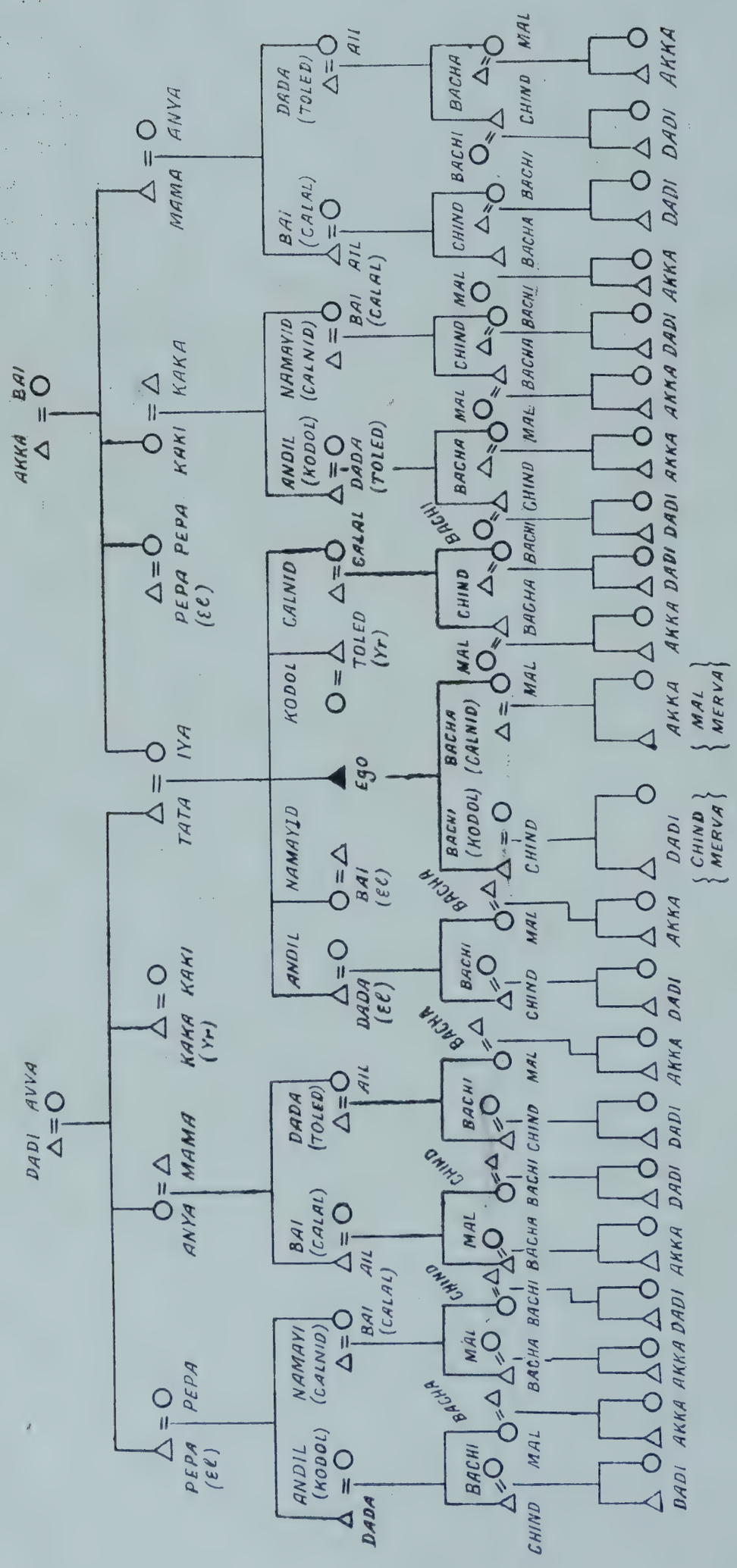

Chart No. 1—Dhurwa Kinship Terms

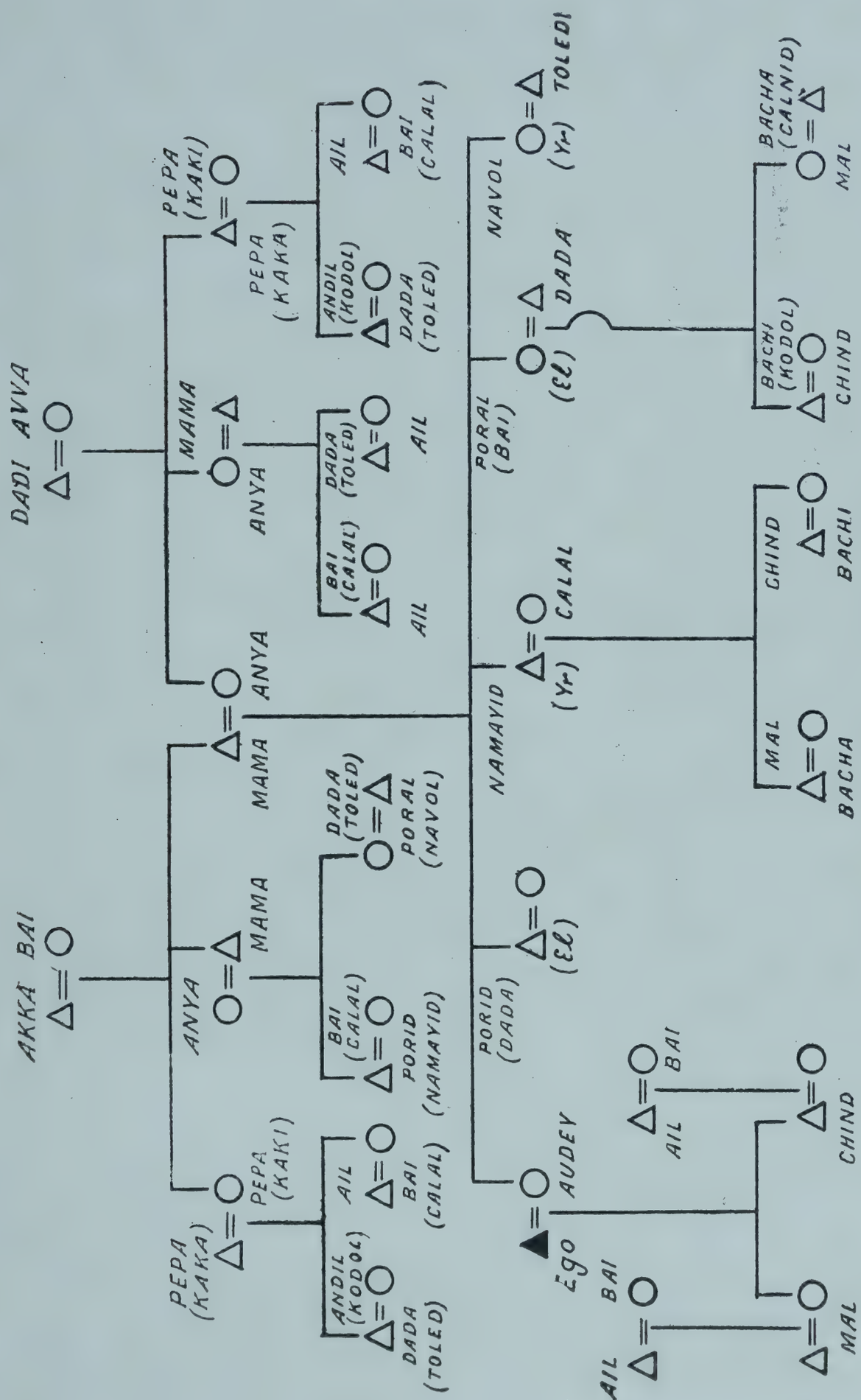

Chart No. 2—Dhurwa Kinship Terms

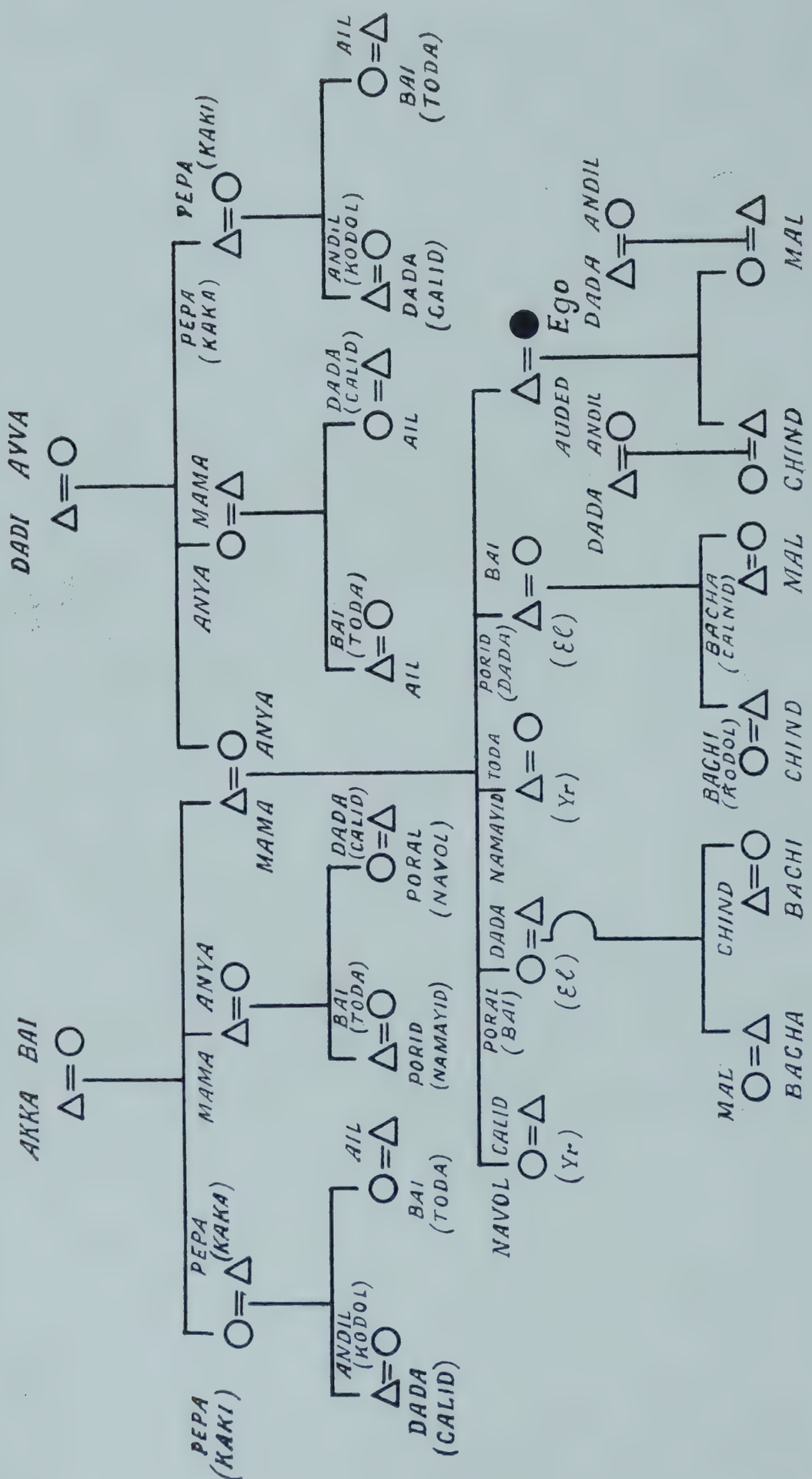

Chart No. 3—Dhurwa Kinship Terms

are expected to show due respect and regard to their elder siblings, although when the siblings grow up and become mature they behave with one another as equals. The relationship between grown-up brothers and sisters is, however, characterized by restraint and formality, but due to the prevalence of the patrilateral form of cross-cousin marriage, the ties between the respective families of procreation of the brother and sister are renewed in successive generations, although as a result of divorce or desertion, the relationship between the two families sometimes becomes bitter.

The above analysis of the Dhurwa kinship system shows that there is a fairly close correlation between the relationship terms and the behaviour patterns between several categories of relatives. Not only are the relatives of the Ego grouped together or distinguished from one another but also their social relationship is expressed in terms of rights and duties and attitudes. It is also clear that the Dhurwa kinship system is of a classificatory type for the lineal and collateral relatives of the Ego are merged. What, however, appears to be the main distinguishing feature in the Dhurwa kinship system is that an important distinction is made, both in the terminological structure as well as in the attitudes and behaviour, between the consanguineal (Kutamb) and affinal (Saga) relatives of the Ego, although, to be sure, some of the latter are classified with the consanguineal ones. This bipartition of the Dhurwa society, whereby not only the near relatives but also the distant ones are classified either in the category of Kutambs or in that of the Sagas have already been discussed.

CHAPTER SIX

LIFE CYCLE ACTIVITIES

Birth and Name-giving Ceremonies

It may be stated at the outset that while the Dhurwa are aware that intercourse (*kono*) between husband and wife leads to pregnancy (*dora potta*), it is also admitted by them that there are such women (called *venod* or *banje*) who are incapable of bearing off-springs. However, during the pregnancy, women's movements are generally restricted, e.g., neither she would go near the forest-clad hills, nor she would move freely in the night. Since there is no professional mid-wife in the village, so the mother is aided at the time of delivery (*nangul danya*) by three to four women of the village (including her own mother-in-law). It is usually an elderly woman who cuts the umbilical cord (as in the case of a girl) by means of a knife or (as in the case of a boy) by arrow head. The afterbirth (including the placenta) is buried in a pit which is dug in the corner of the courtyard (veli) of the house. This pit is then covered with earth over which an earthen lamp is lighted, and the seven rice particles are spread, for, it is believed that thereby the newly-born baby will not suffer from any teething trouble. The baby is also given a bath in warm water which is mixed with turmeric. Two to three bottles of distilled liquor are arranged on this occasion and are shared by all the assembled ones. The mother and the child usually remain inside the house for seven to eight days. During this period, the mother is not allowed to cook any food in the house ; but after the period of seclusion is over, she is required to smear the house with cow-dung water as well as to take a bath, when she can resume her normal routine of life.

It is generally believed by the Dhurwa that (at times) the recently deceased elderly persons in their families return in the body of the newly-born babies, and the method of divination is by means of the peeking of a chicken in the name of the deceased ones from the hands of the new born. If the chicken accepts the rice grains offered to it, it is believed that the deceased person has been reborn. Thus, Chamru, father of the village Pelac (Narsingh by name) is said to have been reborn as the youngest son of the Pelac (Gagru) while Chamru's wife (Bodi by name) who pre-deceased her husband, is believed to have taken birth as

Sukman, the elder brother of Gagru. It may be added in this context that in case a child is born dead, or if the baby dies in a day or two after birth, then the same is buried just close to the house inside the kitchen garden (bari).

It is generally after about a fortnight or so of the birth of a child that the name-giving ceremony (*Ceti-Cai-dam*) takes place. On such occasions, while the mother takes her seat on a mat, holding the newly-born baby in her lap, the invited womenfolk assemble round her and apply, one by one, the tora oil mixed with turmeric paste on the mother and the child. Afterwards the name of the child is selected by the assembled ones—only the names of those relatives are rejected whole names the mother normally avoids in speaking, e.g., her younger sister's husband, etc. Then, both the mother and the father of the new born baby are served in separate leaf-cups with the rice beer (landa); afterwards the assembled ones are served rice beer and/or distilled liquor. Normally, such ceremonies require one pitcher of rice beer (in the case of a girl) or two pitchers of rice beer (in the case of a boy) as well as wine worth Rs 2 to Rs 3. It may be remarked that though all the infants (*papkul*) are desired and taken due care of by their respective parents, still the fact remains that the sons are specially preferred, because "the sons are expected to take care of their parents in their old age, while the girls get married in some other families than their own ". Mention may also be made that in some (if not all) families hair-cutting of the baby is done on the same day when name-giving ceremony is performed.

Concerning the personal names of the Dhurwa men and women of the village, it may be said that sometimes the names selected refer to the months in which the person was born, e.g., Mahengu and Mahengi (Magh), Phagnu and Phagni (Phalgun), Chaitur or Cheetu and Chetai (Chaitra), Baisakhu (Baisakh) and Bhadu (Bhadum); sometimes days of the week in which a person was born are used in selecting the names, e.g., Iyeta and Iyeti (Sunday), Somvaru and Somvari (Monday), Mungla or Mangru and Mongli (Tuesday), Budha and Budhi (Wednesday), Lekhma and Lakhmi (Thursday), Shukra and Shukri (Friday), Shainue or Sonu (Saturday). While the names of the flowers are conspicuous by their absence in the selection of the names of persons, only in one case has the name of a bird been used, e.g., Rami (bird). Such names as are associated with Hindu gods and goddesses as well as other mythological heroes, too, are used by them, e.g., Mahadeo and Mahadei or Parbati, Arjan and Bhima,

Ganga and Jamna, Deva or Devu and Devali, Rama or Ramu or Ramdhar or Ramsingh, Lachman or Laikhan, Dasharat and Raghu, Inder and Shoma, Rama or Raju, Thokru and Sahadev, Shamu and Sakharam, Narsingh and Hari Singh. Sometimes such names which were used by parents as childhood names continue to be used for addressing to the person concerned even after he or she reaches maturity, e.g., Bantu, Naumi, etc., while very often the nick names are used more or less as the substitutes of the real name, e.g., Pukka or Phagwa (i.e., a person who is in the habit of bluffing or blustering), Mandai (a drunkard), Andalgod (one who feels hungry or thirsty every time), Konda deaf and dumb person), Baiyya (mad), Dulgam, Guteri, etc. But there are a large number of names which do not seem to fit with any of the above classification, e.g., Ashai, Bakliha, Bitu, Boda, Boti, Budri, Kuta and Kutu, Puchak, Sonia and Sonei, Wagi, etc.

Now, let me give an eye witness account of the name-giving ceremony of a girl who was born a week earlier (i.e., on 26.12.58) than the day when name-giving ceremony was held, in the (Joint) family unit of a Dhurwa affiliated to the Tippin Palia segment of the Cobra clan of the Marenga village. The actual ceremony started at about 10.30 a.m. and was over in about an hour's time, While most of the invited guests had already arrived in the house before the ceremony began, some others arrived in the house even after the main ceremony was over, a few (including the mother's mother of the newly-born girl) had been staying in the house since the previous night. An earthen lamp was seen to be lighted on the place where the placenta, etc., was buried in the pit in the corner of veli, while most of the assembled womenfolk were engaged in preparing the leaf-cups which were required for drinking the landa and melu (distilled liquor). The ceremony started when a bamboo mat was spread in the closed veranda of the house (baunti), and the mother of the newly-born daughter sat on it. Then the mother began to apply the tora oil mixed with turmeric on the bare body of her daughter, while the assembled womenfolk went on singing in a chorus—the central theme of these songs was to wish the girl a long and happy life, free from diseases, along with her Kutamb and Saga kins. After the message was over, the mother held her daughter in her lap, when the elderly womenfolk came forward one by one and touched the cheeks and chins of both the mother and her daughter. All the while, the menfolk assembled on the occasion watched with interest the proceedings. After a while, the newly-born girl was held by her father's mother, and the singing stopped, for the

assembled womenfolk were suggesting various names for the girl —ultimately Bimi was proposed by girl's father's father's sister, which was accepted by all.

It was at this stage that a large pitcher containing the landa (rice beer) was brought in. The head of the family, who was related to Bimi as per father's father, took out some drops of land and poured over the earth as the tarpani (offering). Later on, he poured some more landa in a separate leaf-cup which was passed on to the mother of Bimi. The mother, in her turn, put a few drops inside the mouth of her daughter and then helped herself with the rest. In a similar manner, another leaf-cup containing the landa was passed on to the father of Bimi who also first dropped some drops on the lips of his daughter and then drank the rest himself. Thereafter the bottles containing the distilled liquor were brought, and some drops of the liquor were poured (*tarpani*) on the ground ; then a leaf-cup was filled with it and was passed on to woman (phagni) who had cut the umbilical cord of Bimi on her birth. Phagni, too, put a few drops on Bimi before she helped herself with the rest. Afterwards, the landa and/or distilled liquor were served to all the assembled people—only some of them were asked to stay to take their meals, consisting of boiled rice and pulse. With regard to the participants gathered on this particular occasion, a rough count was taken by me, and it was found that not less than ninety men, women and children (including the inmates of the house) had assembled together. While most of the participants belonged to the same village of Marenga, especially to the same hamlet of the Tippin Para, as many as six men and women had attended the ceremony from the adjacent villages of Tahakwada, Marjum, Leda and Littiras, while the mother's mother of Bimi had arrived from Mangalpur village one to two days earlier. The participants included, among others, a Rawat of the village and a Mahara (acting in the capacity of the Kotwar of the village). It may, however, be pointed out that not all the Dhurwa families of the village were invited to attend the ceremony, for, it depends upon the nearness of relationship as well as on the degree of intimacy between the respective (Dhurwa) families that participation in such like ceremonies takes place. In any case, it was reported that some of the invited guests attending the name-giving ceremony of Bimi had brought with. Themselves either a (small) pitcher of rice beer or a bottle of wine and/or one to two sulis of rice. I also learnt that Phagni who had cut the umbilical cord of Bimi on her birth, received for her services such articles as one bottle of wine, one suli of rice and six paise in cash for salt, pulse, etc., though it was

claimed by her that she had rendered the service to the mother of Bimi purely on grounds of *Dharma*.

Childhood Activities

Among the Dhurwa, children (papkul) continue to be breast-fed for as long as three to four years. It is recognized by them that the girls' (*mal*) mature is earlier than the boys (*padij*) ; and it is only when a girl reaches the age of nearly fifteen years that she is called *illei,* while in the case of a boy, he is called *illed* when he is about eighteen years. But it may be pointed out that no ceremonies are performed by the Dhurwa when boys or girls become adult (*illenkul* or *illecil*). Even when a girl is subject to menstrual cycle (*gandel anya* or *vallel gatta* or *dotel cadita*), no rites mark this event in her life ; but a woman in her menstruation period is expected neither to cook meals nor to fetch water. Such a woman may, however, attend the marriage ceremonies, but she is then required to sit separately ; she may also visit the market. After the monthly period is over, she would go to take her bath and wash her clothing, etc., in hot water mixed with ashes. It is worthwhile to add that during the earlier period of childhood, both the boys and girls mix freely in play and work ; but as they grow in years, the boys and girls segregate in separate groups, though on special dancing and singing occasions they meet in pairs.

Mention may be made in this connection that boys ranging in years between six and twelve were found to make beautiful clay figures of men, women, and animals like horses, elephants, cows and bullocks, while girls of the same age sets would draw in a short time by means of three fingers of their hands the figures of men, women and cattle on the bare ground. Learning by constant association with their elders, a child of seven to eight years, for instance, can imitate skillfully different dancing poses of the adults, and a boy of the same age, in addition, can distinguish between different tunes of the drum beatings. When a boy reaches ten years, he is expected to know how to handle the plough in the fields, reap the harvest, graze the cattle, cut and bring the fuel from the forest, alone or in company, sell and purchase articles in the market. Similarly, a girl of same age is considered proficient enough in weeding paddy fields, reaping harvest, cooking meals, fetching water from the water sources, taking care of her younger siblings, sweeping the house and smearing veranda, walls and courtyard of the houses.

Recently, a *jan-pad* (school) has been opened in the village of our study, and a full-time teacher appointed to teach the students. This school is meant for the boys and girls living in Marenga village (except Kana Para) and Tahakwada village. Towards the end of 1958, the total strength of the students attending the school was thirty-eight (consisting of thirty-six boys and two girls—their respective ages ranging from eight to fourteen years). It was observed that thanks to the persuasive methods adopted by the (Dru Gond) teacher, the students regularly attended their classes—the school hours being 11 a.m. to 3 p.m. (except on market days). As compared to the rest of their age-groups, almost all the school going children used to put on shirt and half-pants, sometimes indulged in such games as *kabadi* and *kho-kho,* and occasionally taken outside their village to participate in social gatherings organized by different schools. We also learnt that there were a few grown up boys and girls who had previously attended the school but had discontinued their studies after passing II or III (Hindi) standard. But whether they had attended the school previously or were still continuing to attend the school, these boys and girls would not show any marked difference from the rest of the village children (excepting for their school dress, etc.) and were attending to their normal avocations, just like other children of the village.

Let me state now the activities of economic nature, which were noted by me for the following Dhurwa boys and girls:

1 Kartik (12 years old boy) performed in 1957-58:

(a) Threshing work for three Dhurwas of the village, thereby earning 50 paili paddy (approximately valued at Rs 12.50),

(b) Collection of forest products like karanji, cinpag, temru, poikul, mangoes, cokal, jam and mahua, which were sold by him for Rs 5.12 and

(c) Ploughed the fields of three Dhurwas, thereby getting 24 paili paddy (approximately valued at Rs 6.00),

2 Sukman (12 years old boy) was engaged in 1957-58 with:

(a) Threshing work for four Dhurwas of the village, thereby earning 60 paili of paddy (approximately valued at Rs. 15.00) and

(b) Collection of forest products like tamarind, mahua and

honey, which were sold by him in the market on different occasions for about Rs 5.00.

3 Iyetu (12 years) engaged himself in 1957-58 in :

(a) Threshing work for six Dhurwas, earning thereby 3 *khandi* (or 60 paili) of paddy (approximately valued at Rs. 15.00),

(b) Weeding the rice fields of two Dhurwas, getting the rice worth about Rs 3.00,

(c) Preparing a number of bamboo baskets like *takra* and *gappa,* which were sold by him in different markets for a sum of Rs 10.50 and

(d) Collecting such fruits as plantains, jam and mahua, which were sold by him on different occasions at Rs 1.19.

4 Sukman (11 years old boy) also engaged (during 1957-58) in : Threshing work, collection of tamarind, etc., and preparation of the bamboo baskets, thereby earning about Rs. 7.00, in addition, he was engaged in such types of work as are done on the mutual exchange basis (*betia*) like embanking the fields, ploughing and weeding.

5 Bhadu (14 years old boy) was engaged in 1957-58 with such activities as :

(a) Collection and sale of fruits like the mahua flowers (out of which he prepared the tora oil, selling it for about Rs 3.00, karanji, cinpag, temru, kosum, mangoes, cokul, jam, toi-kul, rengal, aonla, tonda pelkul, cecancandi, barangi, belwa, siari and honey—selling at Rs 10.31 in cash and in exchange of salt,

(b) Caught fish and killed birds, selling nearly at Rs 10.00 and

(c) Threshing work, thereby earning 6 khandi of paddy (approximately valued at Rs 30.00).

6 Devu (16 years old boy) :

Not only helped his father in such agricultural activities as preparing field embankments, ploughing and weeding, but also

performed threshing work for eight Dhurwas, thereby earning nearly 3 khandis of paddy (approximately valued at Rs 14.50 as well as prepared bamboo baskets which were sold by him at Rs 1.25).

7 Jumki (a girl of 12 years) was engaged in 1957-58 in :

(a) Harvesting paddy fields of two Dhurwas, earning thereby 24 paili of paddy (approximately valued at Rs 6.25),

(b) Collecting mahua, tamadind, poikul and coikul fruits, which were sold by her at about Rs 5.00 and in exchange of salt, and

(c) Working in the road repairs undertaken by the P.W.D. for eight days and earned Rs 8.00.

8 Iyeti (a girl of 12 years) :

Worked in weeding paddy fields belonging to a Dhurwa for a day, earning 2 paili of paddy (approximately valued at fifty paise, and harvesting the paddy fields belonging to two persons, earning six paili of paddy (approximately valued at Rs 1.50 and Re. 0.96 in cash).

Marriage

Although the Dhurwa of Bastar follow different methods of procuring a male, still they hold that a person would enter into a wedlock with a woman through two main types, namely, *curca* and *tika*. What mainly distinguishes the curca (marriage) from the tika (union) is the presence of the bride wealth, which is paid either in goods and gifts or in the form of 'service'. The tika union is usually entered into by a man with a widow (*ketal*) or a woman who has left her previous husband (*candri*). Sometimes a woman herself goes (tanung cenda) over to and starts living in the house of a man of her choice, of course, with the implied consent of the concerned man, and the union with such a woman takes place in the tika form. Similar is the case when a Dhurwa enters into a wedlock with a woman belonging to the 'higher' or the 'lower' ethnic group than his own. In all these cases, the rice paste only is applied on the respective foreheads of the bridal couple, although the bride-groom is required to pay the compensation to the person who claims a prescriptive right over the woman with whom he enters into wedlock (e.g., her

previous husband or the younger brother of the deceased husband). Strictly speaking, the curca should be performed between the cross-cousins and the negotiations for the hand of the girl should be started by the bridegroom's father, who would be none other than the girl's mother's brother (*mama*). Occasionally, it so happens that an unwilling girl is captured (lit. pulled : tand) by her cross-cousin and party, with the full knowledge of the parents, and forced to marry her cross-cousin. It is only when the girl's mama agrees to waive his prescriptive right over his sister's daughter that a girl can be married to somebody else than her cross-cousin. In a few cases, however, the curca is not proceeded by negotiations (*mangni*) but by elopement, when the couple run away (*tul*) to distant villages where they get themselves married in the house of a relative ; after a while, they are allowed to return, and the bride-wealth, etc., is paid by the bridegroom's party. The curca is invariably solemnized by sprinkling the turmeric paste mixed in tora oil on the bride-groom and the bride.

While a union entered in the tika form is a simple affair, requiring a limited number of participants and formalities, the curca entails not only a lot of expenditure and preparations but also an 'elaborate series of transactions and procedures'. Nonetheless, the curca is considered to be a respectable form of the wedlock and is highly desirable, for, it enhances one's prestige in the society. On examining the (455) marriages which were recorded by me during my field work in the Dhurwa dominated village of Marenga, we find that while the village-wise affiliations of the respective mates (both past and present) is known to our informants, but they could furnish the necessary particulars for only 215 marriages ; out of these, 133 wedlocks were described as the curca and the rest 82 unions were entered through the tika form. Regarding the curca since only a negligible number of the wedlocks were reported to have been performed through 'capture' or by 'elopement', so it may be said that the curca out numbering as these do the tika are largely preceded by negotiations (mangni) ; hence the curca are alternatively referred as the Mangni form of marriages, too. Then, again, out of 133 curca, as many as 68 marriages are reported to have been negotiated between cross-cousins, which shows that the cross-cousin marriages accounted for 58 per cent of the curca (or Mangni form of marriages). These 68 cross-cousin marriages, in their turn, comprise 56 wedlocks entered with (one's own or classificatory) father's sister's daughters and 12 wedlocks entered with (one's own or classificatory) mother's brother's daughters.

It is evident from the above figures that 42 per cent of the curca are negotiated between such persons who are not related to each other as the cross-cousins. Obviously, the procedure that is adopted for arranging such marriages starts when a girl is selected by the boy's parents. For selecting the bride for their son, the considerations taken into account are, firstly, that the father of the girl should not only belong to their own community but also he should be related, as far as is known as the Saga (affine) of the boy's father; secondly, there should not be any sort of (what is locally called) the Mai-Lag, i.e., the mother of the girl should have given normal delivery and the children born to the mother should not have died in their infancy; thirdly, the particular girl should not be suffering from any physical or mental defect; and, lastly, the girl in view should not be lazy, fond of excessive drinking, quarrelsome in nature, etc. After the selection of the bride is made, the father of the bride-groom, along with three to four male members sets out on a date convenient to him towards the house of the girl's father. As a gesture of goodwill, a bottle of wine is taken by them. But while proceeding towards the girl's father's house, the good or the bad omens are looked for. These omens may be arranged as follows:

Bad omens	*Good omens*
When somebody throws rubbish or when dirty clothes are taken to be washed.	When somebody is seen carrying fuel or bamboos.
When a dead body is being carried.	When somebody carries paddy.
When somebody is carrying a black earthen vessel.	When somebody is carrying a vessel filled in with water.
When a fox or a snake crosses the path.	When a spotted deer crosses the path.

If the bad omens are met with, the visit is postponed till a later date, but in the case the omens are favourable then the party proceeds direct to the girl's father's house. This occasion is called the *kodul adiyum candam* (to pay a visit in order to ask for the daughter-in-law). On learning the purpose of their visit, the girl's father directs them to get the formal permission from the girl's mother's brother (mama) before he can give his consent to the marriage. So, the party in question next approaches the mama of the girl to ascertain his wishes. In case, he wants to marry his son with his sister's daughter, then the negotiations are dropped. But if he is willing to waive his prescriptive right over his sister's daughter on account of the fact that his son is too young or too old to marry the daughter in question, then he is to be paid the mama duita, which consists generally of a new

piece of cotton cloth, one pitcher of the rice beer, one bottle of wine, one cock and/or one paili of rice.

Whether the marriage of the boy is arranged with his cross-cousin, or not, but what follows in both the cases is called the *advermend* (asking the bride to come over and stay in their house). On this occasion, the same party consisting of the boy's father and other menfolk, accompanied sometimes by the girl's mother's brother, visits the girl's father's house. The articles taken along by them consist usually of two pitchers of rice beer, one bottle of wine and one paili of rice. After reaching the bride's father's house, the bridegroom's party makes it clear that the girl's mama has agreed to waive his prescriptive (guda) right over his sister's daughter with the result that the girl's father is in a position to accept the marriage proposal. This occasion is finally marked by serving the drinks brought by the bridegroom's party to all the assembled ones representing the two parties as well as the village elders. But quite often it so happens that the bridegroom's party, instead of approaching the father of the girl first, proceeds direct to the girl's mama in order to inquire whether he is prepared to forego his guda right over his sister's daughter in their favour. If the answer is favourable, the mama duita is paid, and then the party visits the bride's father's house directly.

Yet another visit is paid after a while to the bride's father's house by the bridegroom's father, normally accompanied by 10-12 members. This occasion is called the *Muh-patt* (third time, to get hold of). The articles taken along by the party in question generally consist of two pitchers of rice beer, three bottles of wine and five paili of rice. As on the previous occasion, drinks are served to the assembled ones, and meals are taken by the bridegroom's party and others specially invited on the occasion. Further, the "go-between" called the *Badil muttak* (the betrothel, old man) is selected from the bridegroom's party, as also the necessary details concerning the bride-wealth (called the Kharcha or Raqam Vercil, lit., the expenses or the amount of the paddy) are decided on this occasion. Generally, the articles which are decided to be included in the bride-wealth, are as follows:

	Articles		*Price* Rs.	Paise
1	One gelded pig, approximate costing	..	20	00
2	3 Khandi paddy	,, ..	15	00
3	5 pitchers of rice beer	,, ..	8	91
4	15 paili of rice	,, ..	7	50
5	One new piece of cloth	,, ..	5	00
6	6 bottles of distilled liquor	,, ..	2	06
	Total	..	58	47

A week or so before the actual date of marriage ceremony, the Badil muttak is required to pay a visit to the bride's father's house, either alone or with 1-2 male adults, in order to inform the bride's people that, subject to their convenience, the bridegroom's party would arrive in their village (house) on such a date. On this occasion (which is called the curca ad iyum—to ask for the celebration of the marriage), the Badil muttak is given a bottle or two of distilled liquor. Generally speaking, it takes more than a year for the marriage negotiations to be concluded by the actual performance of marriage. It may be added that marriages among the Dhurwa are invariably celebrated during the months of Magh, Phalgun and Chait (i.e., from the middle of January till the middle of April). However, once the actual day of wedding is fixed, according to the mutual conveniences of the concerned parties, the bridegroom's father starts making preparations for storing or purchasing the paddy/rice, cloth, etc. And a week or so before the actual day of wedding, as many as 16 women are invited for 1-2 days to pound into fine powder the husked rice and the mandia for preparing the (large quantity of) rice beer (landa) which is required for the ensuing marriage. On the previous day of the actual wedding (or, in some cases, two days earlier), the bridegroom's father offers puja (rituals) in the common shrine of his Jama (or Kul) through the priest attached to the shrine in question. After performing the puja with such articles as the milk, rice and turmeric powder, a small quantity of the turmeric paste is mixed in the tora oil which is used for applying on the bridegroom on the same day, as also, on the next day to the bridal couple jointly.

Quite often it so happens that by the time the bridegroom's father returns from the shrine, most if not all the guests have already assembled in his house. On one occasion as many as 100 persons were counted to have assembled in the father's house of the bridegroom (Sahadev by name) by about 10 a.m. on 5.2.58. In that gathering, 18 young men were found to be dancing in two rows to the accompaniments of musical instruments. On the two opposite sides of the dancers were sitting on the ground as many as 40 men and 30 women, in separate groups, surrounded by their children—all of them were enjoying the various poses and movements of the dancers. At some distance from the menfolk were sitting separately three Mahars of the (Marenga) village. After a while, the bridegroom (curca padij) accompanied by his (kutamb) brother, locally called the per padij (per—again, padij—boy) were led by an elderly female, who should be, ideally speaking, the *tandil*—elder brother's wife of the bridegroom. They proceeded

towards the open space just near where the young men were performing the dancing. All the three remained standing on a bamboo mat which was spread over there just then. Thereafter, 2-3 women came forward to apply the consecrated turmeric paste on them, and, then water from the earthen pitchers was poured over them (*nir—chpparana*). Later on, they returned back to their house, and the dancers also stopped the dancing. By about 11 a.m., a big earthen pitcher containing rice beer (landa) was brought from within the house, and the pelac poured a little quantity of landa on the ground as an offering (*tarpani*). Thereafter, the rice beer was served to all the assembled ones in leaf-cups (*chokni*)—the turn of the womenfolk came after the menfolk were served. So also were three Mahar men, sitting separately, served with the rice beer.

At about 2 p.m., the bridegroom and his companion (*per padij*) stood in the middle of the veranda of the house, and were surrounded by a large number of womenfolk, young and old, all singing in a chorus. Then, some elderly women approached the bridegroom, one by one, and started putting the bead necklaces round his neck as also fixed the flowers round his ears and on his head. The per padij was almost treated in the same fashion. Afterwards, the *ex*-Patel of the village was requested to tie the turban on the head of the bridegroom, while his companion helped himself unaided. In the meanwhile, as many as 18 young men, dressed in their traditional dancing dress, started dancing in the open ground to the delight of the villagers assembled on the occasion. By about 3 p.m., the bridegroom and his companion along with the 'go-between' (Badil muttak) came out from inside the house, and the dancing stopped. Instead of dancing, 2-3 of them started playing on the drums. Very soon, a procession (*odir*) was formed with drummers leading, followed by the bridegroom, his companion and the go-between. Some of the erstwhile dancers followed the procession in pairs, while others were engaged in carrying such loads as the earthen pitchers containing rice beer, the gelded pig tied in a bamboo frame-work and other articles forming a part of the bride-wealth. The women participants singing in a chorus accompanied the odir for some distance and then returned back. In this connection, it may be added that the articles included in the bride-wealth may not be paid at a time, but may be sent later on.

After staying for the night in the bride's father's village (or house), where they are served with rice beer and distilled liquor as well as fed with cooked rice and pig's/goat's meat, the bride-

groom and his party return back to their own village, accompanied by the bride and her companions. Thus, the marriage party accompanying Sahadev, the bridegroom, to the Moriapal village (about 35 miles from Marenga village) to bring the bride and her companions from her village, returned back to Marenga village on 7.2.58 by about 10 a.m. Instead of proceeding direct to the bridegroom's house, the party halted in an open ground at a distance of nearly one furlong from Sahadev's house. The bride (curca mal or duli) surrounded by her girl companions (numbering 25) was crying and sobbing, apparently, in response to the chorus songs (Thusu & Iyer, 1965) sung by her girl companions, while opposite to them, at some distance, were sitting silent and demure the bridegroom and his companion. Just by their side, as many as 40 young men (from the bride and bridegroom's sides) were engaged in dancing in rows. It may, however, be mentioned that an hour or so before the arrival of the bridegroom's party, a group of women from the bridegroom's house proceeds to the nearby scrub jungles to cut the sapling of the silk cotton tree (*burukar*), accompanied by two (male) drummers. The required sapling (*kar*) of the silk cotton tree (*buru*), measuring nearly 2′ in height, is then brought to the courtyard of the house where it is planted in a hole, and a cotton thread attached at intervals with mango leaves is tied round the protruding ends of the burukar. The invited guests who start arriving in the house of the bridegroom all along in the morning, are formally received near the door of the house by some women representing the bridegroom's side. The formal reception consists of pouring water on the feet of the guests and applying the (rice powder paste) *tika* mark on their foreheads. Most of the close relatives and friends invited on the occasion bring with themselves pitchers of the rice beer and/or bottles of distilled liquor, and/or paddy or rice. Mention may also be made of the fact that just as some women are assigned the work of receiving the guests, so also are some young girls engaged to fetch water from the wells for preparing meals as well as for drinking purposes. Similarly, some adult males are entrusted the work of cooking the meals, while 1-2 (male) kins are allotted the specific function of a sort of Store-keeper (*Bhandarin*). In addition, a number of boys are engaged to bring fuel for preparing meals, as also the leaves for preparing the leaf-cups. Their services are also required for constructing temporary sheds and shelters for the invited guests.

Round about 12 O'clock, the bridegroom, his companion, the bride and her companions are led in a procession by the 'go-between' and the (Dhurwa) drummers inside the house of the

bridegroom where they are formally received by the mother of the bridegroom and other elderly womenfolk. The bridal couple are then made to stand close to one another inside the closed veranda of the house, being surrounded on all sides by a large number of the men and women—the latter singing in a chorus. Thereafter, the pelac of the village sprinkles, first the bridegroom and then the bride with the turmeric paste mixed in oil as well as the rice powder mixed in water. After the pelac, some (Dhurwa) elderly males start sprinkling the paste on the bridal couple ; the turn of the womenfolk comes last of all. It may be noted that this ceremony of applying the turmeric paste and rice powder paste as well as the subsequent rites is invariably performed by the Dhurwa of Bastar in the afternoon. To resume the account, it was at about 1-30 p.m. that the bridegroom and the bride were carried on the respective backs of two elderly (Dhurwa) males from inside the closed veranda of the house to the open courtyard near the spot where the burukar was planted in the hole. But while there seems to be no restrictions as is to who would carry the bridegroom and the bride on his back, in the case of the woman who is required, among other things, to carry on her head the brass vessel containing water with mango leaves at the top, should be related to the bridegroom as his *tandil ayal* (the woman who is the wife of the elder brother). In actual practice, however, an elderly woman who has been married in the same consanguineal group (viz., clan, Jama or lineage) to which the bridegroom is affiliated, generally fulfils the role of the tandil ayal. It is she who holds on her head the brass vessel containing water with mango leaves at the top, and leads the two elderly males who carry on their respective backs the bridegroom and the bride, followed by other men and women, singing in chorus, and some young men who manage to dance and play on the drums. The whole crowd go round the burukar seven times—first 3-4 circumambulations being made in clockwise directions and the rest in anti-clockwise directions.

Even when the marriage is arranged by 'service', similar rites are performed, of course, in the father's house of the bride, where the bridegroom has already put in 2-3 years' service. However, after the application of the turmeric paste jointly on the bridal couple and the required number of the circumambulations made in a procession round the burukar, the procession comes to a halt, when a bamboo mat is spread in front of the burukar. Then, the tandil ayal takes her seat on the mat with both her legs stretched towards the burukar, and in her lap the bridegroom is asked to sit with his legs stretched, and last of all, the bride is forced to

sit in the lap of the bridegroom by keeping her legs stretched. Afterwards the pelac of the village sits down on the ground in front of them. Facing the burukar, he keeps the husked rice in a lot just by the side of the burukar and while placing a raw egg on the top of the rice, he puts by the side of the egg the brass finger-rings belonging to the bridegroom and the bride. Thereafter, the pelac would place an axe in the joined right hands of both the couple and helps them to strike with one blow the egg placed on the rice. After the contents of the egg are examined for omens, the pelac would sprinkle on the bridal couple by means of mango leaves the water contained in the brass vessel, which was earlier carried on head by the tandil ayal. Soon after, the participants start pouring the water from the earthen pitchers over them with the result that they get completely drenched. And while the bridal couple are engaged in wearing new clothes, the (male) participants go over and sit on an open ground, where they are served with rice beer, while the female participants lead the bridal couple inside the house, where the rice measuring (*perkul uidatana*) ceremony takes place amidst the general rejoicing. What happens during the perkul uidanta ceremony is that the tandil ayal measures the husked rice in a wooden measure, which at first put into the crossed hands of the bridegroom. The bridegroom passes into the crossed hands of the bride who, in her turn, passes back into the cupped hands of the bridegroom. This sort of give and take is repeated 2-3 times ; then the tandil ayal puts the wooden measure containing the rice on the ground near the right foot of the bridegroom who kicks the measure in such a way that its contents fall near the bride. The bride, in her turn, repeats this process in a similar manner. Thereafter, wine is served first to the bridal couple and then to the female participants. Then the bridegroom is given a little quantity of tora oil in order to apply it on the hairs of the bride and after combing her hairs he ties it in a bunch at the back. The bride, likewise, applies the oil on the hairs of the bridegroom and after combing his hairs ties it in a knot at the centre. After the hair-dressing is over, the cooked rice arranged in four leaf-cups on the winnowing fan is brought from the house. The tandil ayal then places these leaf-cups in the respective hands of the bridegroom and the bride. After exchanging these leaf-cups with each other, the tandil ayal takes a little quantity of the cooked rice from these four cups, and puts it in a folded leaf which is given by her to the bridegroom. He keeps it inside his mouth for a little while, and then he brings it out and holding it by hand he forces it inside the mouth of the bride, who tries to resist his efforts but ultimately yields much to the general laughter of all the parti-

cipants. Thus come to an end the marriage proceedings of the day.

Yet another formality has to be gone through before the curca (marriage) can be said to be satisfactorily concluded. After about a month or so of the actual marriage ceremony (as described above) the party from the husband's side pays a visit on a date mutually convenient to the wife's father's house. The party numbering 10-12 persons includes the husband, his mother and father, the wife, the Badil muttak and other relatives. On reaching the wife's father's house, the newly married couple are made to sit together (untit) in the veranda and leaf-cups containing the water (nir) are given to them. After exchanging the leaf-cups with each other, they drink water, and so this ceremony is called the Nir Untit. Later on, however, the distilled liquor and/or rice beer is served to all the assembled ones (including the elderly members, from the wife's father's village, who are specially invited on the occasion). The articles taken along by the husband's party consist of two pitchers of the rice beer, six bottles of distilled liquor, five paili of rice, and one small pig. It is stated that the main purpose behind this last formal visit is to bring home to the husband that henceforth he will maintain such a respectable distance as would amount to 'avoidance' with the wife's elder sister(s) and elder brother(s), for, according to kinship usages, the relationship with such a category of relatives was, prior to his marriage, one of 'licensed familiarity'. However, after staying for the whole day in the wife's father's house (or village), the husband's party returns back to their village towards the evening.

The above account describes the curca (marriage) which is arranged by negotiations (mangni), but in a few cases curca is also preceded by elopement. As already mentioned, the marriage ceremonies is the case of the elopement takes place in the house of a relative living in a distant village where the couple have run away. In such cases, not all the ceremonies are performed, if only because of hurry (*tuli*) ; but since the marriage by elopement is regarded by the Dhurwa as the curca, so the run-away couple are not only allowed to return back to their village as husband and wife, but also the bride-wealth is paid in the form of goods by the husband's father to the father of the wife (as also to her mother's brother, as the case may be). Mention has also been made that when the curca is arranged by payment of the bride-wealth in the form of 'service', the marriage sequences are performed in the bride's father's house, and what is more, the expenses for feeding the guests as well as the preparation for making the rice beer,

etc., are borne by the bride's father. It may be added that even after the celebration of the marriage, the bridegroom is required to put in 'service' for another year in the house of the bride's father, in addition to 2-3 years' 'service' previously put in by the (prospective) bridegroom in the house of his (future) father-in-law. It also happens that when the husband has returned back to his village, accompanied by his wife, after putting in the service for 3-4 years in the house of his father-in-law, then a general feast is given by the bridegroom's father to their relatives and neighbours.

Let me now describe the different ways through which a person enters into tika (union) with a woman. But, whatever be the method followed in procuring a mate (viz., by mangni, tika, etc.), the concerned woman is given among the Dhurwa of Bastar the full status of a wife with the result that "the children born to the woman are recognized as the legitimate offspring of both the partners". Concerning the widow re-marriage, it may be stated that on the death of her husband, the wife is expected to break her bead-necklaces (as also the glass bangles). She is also expected not to re-marry unless the death anniversary (*cutak*) of her husband is performed. It is on the occasion of the cutak ceremony that a formal inquiry is made from the widow by the elders of the village as to whether she would like to wear the *khilwa* (which consists of the folded mango leaves, being worn on that occasion on the upper part of the ear) in the name of her deceased husband's younger brother (called *Namayid*) or in the name of her son (if she has any) or would prefer to return back to the house of her father/brother or is inclined to marry some one else. In case, she decides to enter into wedlock with somebody other than her namayid, then it is customary to pay a sum of Rs 5 in cash to the namayid, as he enjoys, after the death of his elder brother, prescriptive right over her. Although the practice of junior levirate is prescribed among the Dhurwa of Bastar, still, surprisingly enough, no such case came to our notice, although there are a few cases where distant, classificatory younger brothers are reported to have entered into tika (union) with their deceased (classificatory) brother's wives. Generally speaking, elderly widows having children of their own prefer to stay in the village (or house) of their deceased husbands, while young widows, with or without children, manage to enter into wedlocks with others.

So far as the inter-caste marriages are concerned, it may be pointed out that out of 455 Dhurwa marriages recorded by me

in the village of Marenga, while none of the Dhurwa women of the village had entered into a marital union with a person who did not belong to their own ethnic group, there were only two cases where the Dhurwa males belonging to the village of our study had entered into tika with women belonging to the 'lower' and 'higher' groups than their own, namely, the Bison-horn Maria and the Rawat ethnic groups. More of it will be dealt with under the Chapter on Panchayat; in the mean while, it may be noted that the childen ensuing from such unions were regarded as Dhurwas. It may be added in this context that in a nearby village (namely Lada which lies at a distance of about four miles from the village of Marenga) three Dhurwa women are said to have entered into marital unions with persons belonging to the 'higher' ethnic groups than the Dhurwa, namely, the Dhakar, the Bhumia and the Bhatra. But while it was possible for only the Bhatra husband to raise the status of his children to that of his own, because (as stated by my informant) of his influence, in the other two cases, the caste-wise affiliations of the children ensuing from such unions remained the same as that of their own mother and not that of their father.

As already mentioned, the Dhurwa of Bastar allow a woman to enter into a wedlock with a person out of her own sweet will. For instance, Sukei and Somvari, the two young girls related to each other as the jama sisters, 'went over by themselves' (tanung cenda) to live on different occasions in the respective houses of Kuta and Ghenova—the two young men whose (first) wives had alreay left them for good. It may be added that the respective parents of both Sukei and Somvari as well as those of Kuta and Ghenova had no prior knowledge that such unions would take place among their children. Of course, the implied consent of their respective mates was there when the two unmarried girls, namely, Sukei and Somvari, shifted of their own accord to the houses of their respective mates and started working and living with them. Such unions are, however, solemnized after a while by applying the tika mark on the couple in the presence of their close relatives and neighbours, but in no case is the bride-wealth paid by the bridegroom's side to the bride's father. Similarly, a woman who had left her husband or whose husband has left her (*candri*) is free to remarry in the tika form of union. It is, generally, left to her previous husband to demand the compensation (*kharcha*) from her second husband. But in case the previous husband has not incurred any expediture when he had married her, he has no right to demand the compensation from the second husband. There are 1-2 cases where the previous husband

of a candri had made no demand from the second husband, even when he had paid the bride-wealth, etc., previously.

As among other ethnic groups living in Bastar, polygyny is found among the Dhurwa. So far as the Dhurwa dominated village of Marenga is concerned, there were six families (out of 94 Dhurwa families) whose male members had at one time or the other two wives living simultaneously together. Various motives are attributed for these plural marriages. In one case, it was stated that as his first wife was incapable of working single-handed, so he had to go in for another marriage. In another case, it was the first wife of Mahengu (Somi by name) who insisted that her husband should marry Rupai in order to lighten her work. In a third case, the husband (Samu by name) who was living since a long time with his (first) wife and their daughter "felt like marrying" a widow. Whatever be the motives for entering into another wedlock, the fact is that such unions are concluded in the tika from. It is expected by the husband that the co-wives should live happily in the same house, but rarely they do pull on for a long time.

Significantly enough, the village-wise affiliations of the respective mates (both past and present) in all the 455 Dhurwa marriages noted by us in the village of Marenga are known to our informants. On examining those villages, we find as many as 51 villages (including those in the adjacent district of Koraput district of Orissa) are connected by curca (marriages) and tika. It is also evident from the number of wedlooks that 58 marital unions (12·7%) have taken place within the same village of Marenga, 152 wedlocks (33·4%) have been contracted with the neighbouring villages (of Marenga), 154 marital unions (33·8%) connect the Marenga village with such villages as lie within a distance of ten miles from it, and 91 wedlocks (20·1%) have been entered into such villages as are situated more than ten miles from the Marenga village, but in no case, these villages lie more than 40 miles from the village of our study. Another feature about the (51) villages connected by marital unions with the village of Marenga is that the Dhurwa of Marenga do not enter into matrimonial relationship with the Dhurwa villages lying around Jagdalpur, namely, Kachenar, Bastar, etc. On the contrary, the Dhurwa of Marenga village would prefer to go in for their Curca or Tika with such southernmost villages of their tract as Murtonda, Moriapal, etc. Even such Dhurwa villages lie beyond Bastar district of Madhya Pradesh State and situated in Koraput district of Orissa State (namely, Rengawada, Dakar-

ras, etc.) are not excluded in so far as their matrimonial connections are concerned.

Funeral Rites and Death Anniversaries

The general practice among the Dhurwa of the village of Marenga (as also among other ethnic groups living there) is to bury their dead (madi ciar) in the burial grounds (*canj-kul* or *muda gatta*) of the village. As already mentioned, the different ethinic groups settled in the Marenga village since long past have their separate burial grounds situated in different parts of the village ; but it is only among the Dhurwa of the village that difinite portions are demarcated in the common burial ground(s) of the village to different 'kin groups' (jama or kul) affiliated to the Cobra clan, as also to the members belonging to the Tiger clan even some lineage groups settled from outside the Marenga village have been allocated specific portions to bury their dead in a (otherwise) common burial ground(s) of the Dhurwa village.

Generally, a person who has died (*canid*) during the day is buried on the same day, but in case the death has taken place at night, then, the dead body is kept in the house for the whole night. As soon as a person has breathed his last, all the kins of the deceased living inside and outside the village are informed of the death of the concerned person. Thus, when Kuta (a young man of about 25 years) died in the early hours of the morning of 21.1.59 after a prolonged illness, news was sent to the consanguineally and affinally related kins of the deceased. The result was that by about 10 a.m. most of the adult Dhurwa men and women living in the village of Marenga had assembled in the house where death had taken place. Mention may be made here that some of the womenfolk attended the death ceremony of Kuta by bringing with themselves half a seer to one seer of paddy and/or rice for the funeral and while the manfolk sat outside the house in the open courtyard, discussing about the death and other related matters, the womenfolk proceeded drectly inside the house, sheddng tears and consoling the old widow mother of the deceased. The dead body of Kuta was lying on a bamboo mat which was spread on the bare ground in the covered veranda of the house. A thick sheet of cotton cloth covered the dead body completely from head to foot, but occasionally, the deceased's mother would uncover the deceased's face and start wailing, repeating pathetically the cry of '*Hai, Dane re !*'. A bunch of mango leaves was waved over the body of the deceased by his mother and other womenfolk assembled on the occasion in order to 'cool' the departing soul (*jiam* or *jiv*).

It was made clear that the deceased would not be buried unless the elder sister of the deceased living in Kinderwada village would turn up and see the face of her younger brother. In the meantime, the articles required for the actual burial of the dead (e.g., new piece of cotton cloth, distilled liquor, paddy, rice, pulses, salt, chicken, etc.) were arranged for by the bereaved family.

However, soon after the arrival of the elder sister of the deceased, final preparation for the burial of Kuta started. The mother's brother of the deceased, who was living adjacent to the house of the deceaded, made an oven of three stones and lit the fire. Then he brought a small chicken and after striking it against a stone, dismembered it, and put the small bits of the chicken mean, as also, rice and turmeric paste inside the earthen vessel. After allowing it to be boiled for sometime, he put out the fire and tied the half-burnt fuel in a bundle, while the eathen vessel with its contents was placed/within an old worn out bamboo basket. In the manwhile, three Dhurwa men prepared the bier (*badda*) from two long bamboo poles, and four more Dhurwa men were sent to dig the grave in the delimited portion of the graveyard ; the bamboo door leading inside the veranda was also removed and kept in the ground in the open courtyard of the house. When all these preparations were complete, the dead body which was brought from inside the veranda by three Dhurwa men, was gently placed on the bamboo door with its head turned towards the east and legs stretched towards the west. A new piece of cloth was placed above the dead body without covering his face. Then the wailing mother of the deceased came forward and applied the turmeric paste mixed in the tora oil on both sides of her (dead) son's face and forehead. Some other womenfolk followed her in applying the paste on Kuta's face, and forehead. Then, some more pieces of cotton cloth brought by the near kins of the deceased were placed on the dead body, thereby covering completely his face. A few rice particles were then tied in the four corners of the top-most cloth spread on the dead body. In the midst of lamentation, the dead body was lifted and placed inside the bier, being covered with plantain leaves. The bier was then lifted and carried on the shoulders towards the burial ground, followed by more than two dozen persons walking in a single file (including a Rawat and Mahar co-villagers of the deceased). Some of the Dhurwa carried with themselves such articles as the paddy, rice, pulses like mung and urud, tora oil distilled liquor and the personal possessions of the deceased like axe-head, plough-share (which was bought by the deceased a few days earlier to his death), arrows and bow, as also, the basket containing the cooked chicken, half-burnt fuel, earthen vessel and

mat used by the deceased during his illness. It may be added that some of these articles like the half-burnt fuel, earthen vessel and mat were thrown at the cross-roads of the village.

When the bier reached the burial ground, the grave (measuring about 6′ × 3′ with a depth of nearly 3′) had already been dug out by the afore-mentioned Dhurwas. The bier was then kept on the ground at a little distance from the grave, and the menfolk sat down, waiting for the womenfolk to arrive on the scene. Soon after, nearly two dozen women arrived in a single file, led by the wailing mother of the deceased (chitai). The grief-stricken chitai removed the cloth from the face of her dead son and touched both the sides of his cheek by her right hand fingers, joining them together just below his mouth near the chin. Other womenfolk with tears in their eyes followed her in this respect. Afterwards the bier was lifted up on the shoulders and after making a round or two of the grave, the bier was kept near the grave. The plaintain leaves spread on the bier were removed and spread in the bottom of the grave. Then the dead body was gently taken out of the bier and gradually lowered inside the grave, keeping the head in the direction of the east with legs stretched towards the west. Later on, the rice particles were unfolded from the corners of the top-most cloth spread on the dead body and thrown in four directions of the grave. The cloth, too, was torn into two unequal parts—the larger portion kept on the dead body while the smaller one was kept on the nearby branch of a tree (as an indication that there was a recent death). Then a particular kind of grass with a hollow cylindrical tube-like structure (locally called nal) was put inside the mouth of the deceased and was pushed above through a hole made in the torn pice of cloth covering the body and the face of the dead body. Afterwards, some amount of salt was spread over and around the dead body. The Mahar Sirah (medium) was then asked to throw a lump of earth inside the grave on the dead body (as a mark of displeasure to the deity who was propitiated by him to save Kuta from his death). After his services were over, the village priest stepped forward, for it is the Pelac who is the first to put earth inside the grave of the dead person. After he had thrown one or two handful of loose earth lying about the grave on the body of the deceased: other menfolk (including the Rawat and the Mahar) also started putting the earth inside the grave. Thereafter a spade was used to completely cover the grave, but the nul grass was allowed to come out from the mound of the earth above the grave. Later on, some big stones and branches of tree were placed on the grave, for, on the next day, a visit would be paid to the

grave in order to know whether it was disturbed in the night by any man or animal.

Afterwards, such personal belongings of the deceased as the axe-head, plough-share, spade, knife, bow and arrows, were brought forward one by one. Some of these were kept upside down, while others were kept intact upon the grave. Accoridng to the Dhurwa, a few of these personal belongings (e.g., knife, axe, bow and arrows in this particular case) are to be handed over to the sister's son of the deceased in accordance with the practice locally called Muar Cherana. It may be added that on an earlier occasion, Dashru had received on the death of his mother's brother such articles as brass thali, knife, bow and arrows in the form of Muar Cherana. Some of our informants stated that, in addition to the above articles, cocks and bullocks were even passed on to the sister's son on the death of his mother's brother. Such a practice is also found among the Mahar, who call this custom by the term of the Dhan Jhokna.

To resume the account of Kuta's death, after the personal belongings of the deceased were kept on the grave, the paddy from one of the bamboo baskets was spread by hand almost in a line round the three sides of the grave, leaving bare the eastern side of the grave (i.e., the direction towards which the head of the deceased lay). On the eastern side of the grave, plain rice was kept in a lot, and near it the boiled chicken mixed with cooked rice (in a leaf-cup) was placed by a Dhurwa who turned his back while keeping the leaf-cup there. Then the bead-necklaces used by the deceased were kept close to the leaf-cup by the same man. After a short interval, the contents of the leaf-cup were thrown away, for, it was persumed that the ghost of the dead had finished after taking the meal. Thereafter, the two baskets containing the paddy were brought over and kept near the western side of the grave (i. e., the direction towards which the feet of the deceased were kept). The menfolk then came one by one and after taking a handful of paddy from one of the baskets, placed it on the grave, and after folding their hands to the (unseen) ghost of the dead departed towards the nearby river to take their bath. The turn of the womenfolk came afterwards, and after taking a handful of paddy from the other basket, they placed the same on the grave, when they, too, went to take their ceremonial bath in the same river, but away from the place where the menfolk had bathed. After the bath was over, they proceeded back to the house where death had taken place. By the time they returned separately, the particular portion of the ground where the dead body had

been laid previously, was cleaned and besmeared with cow-dung and red earth mixed together. While both the menfolk and womenfolk took their seats in separate groups in the open courtyard of the house, a few Dhruwa men went inside the house to the storeroom in order to perform the following rituals.

After sitting on the bare ground, almost in darkness, just below the bamboo platform (upon which was kept the food-grains in bamboo bins), plain rice was kept in a lot, over which an earthen lamp with a cloth wick (lighted) was placed. Then two leaf-cups, each containing tora oil and fish, were brought and kept near the lighted lamp. Afterwards, a few drops of distilled liquor were poured on the ground as an offering to Duma (which stands collectively for the dead ones, as will be explained in the Chapter on Religion). After invoking Duma, a few particles of the plain rice were put on the flickering light of the earthen lamp with a view to knowing whether Kuta had met his end as a result of the black magic. Satisfied with the results of the omens, they poured some distilled liquor in leaf-cups and helped themselves. Thereafter, the dry fish contained in a separate leaf-cup was touched, one by one, by them as also a few drops of oil were applied by them on their bare bodies. Later on, the same tora oil and dry fish contained in separate leaf-cups were brought outside the house and circulated among the assembled ones who touched the dry fish and applied the tora oil on their head or bare body. Then, the distilled liquor was brought and after offering a few drops as libation to Duma, each of the participant was served with the same. But before the menfolk started taking the liquor, some of the elders consoled the widow mother of the deceased to the effect that she should do her best to forget her dead son, for otherwise her other children would be neglected; she was also advised by them that the death anniversary (cutak) of her son might be performed whenever she could afford. After taking the liquor, the assembled mourners left for their respective houses.

About a fortnight or so after the death of Kuta, an old woman of the village also died at about 10 a.m. on 4.2.59. The rites performed in connection with her burial were almost similar to those described above, except the following variations:

Firstly, she was buried in a portion of the burial ground to which her husband belonged; secondly, more than 100 persons of both the sexes (including a Rawat, a Mahar, a Maria Lohar and a Bison-horn Maria, as also Dhurwa kins of the deceased living in near and distant village) participated in her death ceremony;

thirdly, as many as five new pieces of cotton cloth were brought by her relatives and spread over her dead body ; and lastly, it was her brother's son who received the Muar Cherana, consisting of metal vessel, and a piece of cloth. Thus, except the above-mentioned details, the death rites observed in the case of a young man as well as in the case of an old woman were found to be almost similar. It may be remarked in this connection that among the Dhurwa, the head is not shaved on the occasion of the death, neither is any definite mourning period observed by them, although, to be sure, no meals are prepared in the house where death has taken place until the dead body is buried in the grave—the children being fed by near kins neighbours. Another significant fact worthwhile to mention is that the distilled liquor that is needed for the death rites among the Dhurwa should normally be distilled by the Kallars, failing which plain water is mixed with mahua flowers.

Mention may also be made that as among other ethnic groups living in and around the Marenga village, the Dhurwa observe the death anniversary (cutak) of their dead, if possible, within the same year in which death had taken place, otherwise within a period of 3-5 years, at the most. No special taboos are observed by them during the intervening period, except that the widow of the deceased is not expected to remarry unless the cutak ceremony of the deceased is over. Even a marriage cannot ordinarily take place within the family of the deceased so long as the cutak ceremony remains to be performed. It may also be added that since the cutak entails a lot of expenditure by way of feeding the consanguineally-and affinally-related kins of the deceased, so the preparations for making the rice beer and the procurement of food-grains, etc., are made by the bereaved family well in advance of the actual day fixed for the (cutak) ceremony. Occasionally, it so happens that in order to minimise the expenditure connected with the performance of the ceremony of the deceased, two families belonging to the same jama pool their resources together to meet the end in view.

Thus, it happened that Kana and Sadhu belonging to two separate lineage groups but affiliated to the same (neutak) jama combined together to perform on 14.3.58 the Cutak rites of the deceased members belonging to their fold, namely, the wife and the son of Shadu as well as the elder brother of Kana (Gagru by name). Just as was observed earlier when the dead body was being carried, so did the menfolk numbering about 200, proceed on this occasion, in a single file, towards the burial ground. On reaching there at about 12-O' clock, the grave where Gagru was

buried nearly a year back was located, and the dry leaves and other weeds grown over it were removed. Afterwards, plain rice was kept in the two leaf-cups on the east. Then distilled liquor, rice beer and plain water were offered in different cups to the ghost of the dead. Thereafter, plain rice was spread in a line all around the grave. Later on, two bamboo baskets containing the paddy were placed towards the west of the grave. The menfolk then came one by one, and after taking a handful of paddy from one of the baskets put the same on the grave where the dead body of Gagru was buried. Afterwards, the menfolk left to perform similar rites in the other two graves where the wife and son of Kana were buried more than a year ago. The menfolk thereafter proceeded towards the nearby river to take their bath. The turn of the womenfolk came later on ; they arrived waiting and wailing and offered a handful of paddy from the other basket on these two graves ; later on they went to the river to take the ceremonial bath. After taking their bath, the party of mourners returned back separately to the house where the cutak ceremony was observed. While the womenfolk went inside the house and sat crowded together in the open courtyard, the menfolk sat in long rows in the open ground, which was swept clean and besmeared earlier with cow-dung. Soon after, three pitchers of the rice beer were brought from inside the house, and nine Dhurwas from the Marenga village (including the pelac and the Patel of the village) as well as 13 Dhurwas from Chindawada and other villages (representing the affines of the bereaved families) got up and stood facing one another in two lines across the rice beer pitchers. With folded hands, they addressed the Mahaprabhu, praying that they may meet together in future in a friendly manner. After this mutual assurance, the rice beer was served to them as well as to the rest of the menfolk gathered on that occasion. A rough estimate showed that the number of the menfolk was 300 and that of the womenfolk was 350 (including their children)—most of the participants belonged to the Marenga village (including 4 Maria, 5 Mahar, 2 Lohar and 2 Rawat), and others came from distant and adjacent villages. It may be remarked that neither did the Rawat take the rice beer nor did they eat the cooked food which was prepared by the Dhurwa ; instead, plain rice, pulses, salt and chillies were given to them to be used at home. The rest of the assembled ones were served the regular meals, consisting of the cooked rice, pulses and the brinjals —the Mahar, the Maria and the Lohar took their meals in separate groups, away from the main body of the Dhurwa. The turn of the womenfolk came after the menfolk had eaten their meals. It was reported that 3½ khandi of rice, 4 paili of mung, 4 paili of urud dal and the unmeasured amount of the brinjals were used for

cooking purposes, while nearly $1\frac{1}{2}$ khandi of rice and 5 paili of the (ragi) millet were used for preparing as many as 20 pitchers of the rice beer. Most of the invited guests participating in the cutak ceremony of the deceased ones had brought either individually or collectively not less than 25 pitchers of the rice beer. The total expenses incurred on this occasion was equally divided between Shadu and Kana.

We had another opportunity of observing the cutak ceremony of Kuta, whose death was noted earlier. It may be noted that his cutak ceremony was performed just after a month of his death. Generally, the cutak rites of Kuta were the same as have been described earlier; but the number of the participants were not as large as in the former case, nor did there follow such formal assurances of good will and friendly feelings as were noted previously. It may, however, be remarked that in the case of the cutak ceremony of Kuta, all the Dhurwa households of the village Marenga were found to be represented by either a male or a female member (including the Rawat, Mahar and Maria households). In addition, the kins of the deceased from the adjacent villages arrived in time to take part in this ceremony. It was said that as much as six paili of paddy and three paili of plain rice were used by both men and women who had gone to mourn over the grave of Kuta by offering the same on his grave. So also were the distilled liquor, sulphi and the rice beer offered to the 'ghost of the dead'. It may be added that on the cutak ceremony of Kuta, not only the rice beer but also distilled liquor/sulphi was brought by some, if not all the participants. Yet another significant feature observed in the cutak ceremony of Kuta was that soon after the mourners returned from taking the ceremonial bath, a mango leaf was folded and made into (what is locally called) the Rekha khilwa. For, according to the local custom, the Rekha may be worn by the widow in the name of her deceased husband's younger brother (i.e., junior levirate), but in case, she would not like to live with him but prefer to pass her days of widowhood in the house of her deceased husband, along with her son, if any, then she would put on the Rekha in the presence of the village elders in the name of her son. In this particular case, the widow of the deceased was conspicuous by her absence, for, it was related that she was not at all in favour of marrying the deceased and was not willing to live with the younger brother of the deceased. So, then, in case she would remarry, then her second husband was required to make a cash payment of Rs 5 to the younger brother or her (previous) husband. And, so it was simply a formality on the part of the assembled ones to have sent

the Rekha to the widow of the deceased. Another important feature that was observed in the case of the cutak ceremony of Kuta was to the effect that prior to the rice beer/sulphi/distilled liquor being served to the participants, the rite of recalling the Duma took place in the store room, almost, similar to that described on the occasion of Kuta's death and burial in the grave, but without dry fish being brought and used for this particular rite, though the tora oil and the plain rice were brought outside—the former applied by the participants on their faces and/or hands and the latter simply touched—the Mahar and the Maria being given the tora oil in separate leaf-cups.

CHAPTER SEVEN

INTER-ETHNIC RELATIONSHIP

The Dhurwa of the Marenga village are connected through different kinds of socio-economic relationship with the members belonging to other ethnic groups. Before we note the organizational media of contact as well as the actual contents of contact among the various ethnic groups, living within and outside the village of our study, we may mention that the Lohar and the Mahar are the two artisan groups in the village of Marenga and have settled on different occasions in the village at the request of the village elders. It may be added in this connection that since the suitable clay for making the earthen pots was not available in the village, so (it is reported) a Kumhar (potter) from Puspal village was unable to comply with the wishes of Marenga villagers for settling in the village.

A Dhurwa farmer of the Marenga village has stable economic relationship with the village blacksmith who belongs to the (Bison-horn Maria) Lohar group. Of the two Lohar families in the village, one has reduced his traditional calling to a secondary position; but the other is a full-time blacksmith, catering to the requirements of the Marenga villagers as well as those of the adjacent villagers. Although he prepares only the knives (*kedu*) for sale, still his services are required for sharpening and making the necessary repairs to such iron implements as the scythes, axe-heads, plough shares, spades, etc. For the services rendered by him, he receives once a year nearly 40 khandis of paddy from the village. Similarly, those Dhurwas who own the cattle are tied in permanent relationship with the Rawat families settled in the village. In the village, there are 17 Rawat families who are related with one another by blood or through marriage, and it is they who decide among themselves as to which family would take care of the cattle in the village for the following year. Thus, in 1958-59, four (landless) Rawats were engaged in tending the cattle from April-May to January-February. Early in the morning, the cattle in the village are taken by a member belonging to the respective Rawat families assigned for this work, and towards the evening they are brought back and left with their respective owners. For rendering this type of service, each of the concerned cattle-owning household (including the Bison-horn Maria) gives them paddy. Though depending on the number of cattle tended,

still each Rawat gets annually not less than 15 khandis of paddy. It may also be stated that an important festival called the Laundel or Diati takes place sometime in January-February inside the village to celebrate the occasion when the Rawat are no longer responsible for tending the cattle ; much fun and frolic accompany the formal exchange of gifts by both the parties. It may, however, be pointed out that recently a Lohar boy has been engaged in Patel Para by the Dhurwa householders to graze their cattle, while in the Tippin Pal Para, a Dhurwa has taken up this traditional occupation of the Rawat, and in the Kana Para, there are no cattle owners at all. As such, the four Rawats have divided Dhurwa Para of the village of Marenga in four equal zones—each tending the cattle belonging to 9-10 householders. The remaining 13 Rawat householders have become by now full-fledged owner- or tenant-agriculturists, not at all resorting to their traditional calling of tending the village cattle, even as the subsidiary occupation.

The economic relation of the Dhurwa of Marenga with the Mahar settled in the village is almost on the same footing as described above for the Lohar and the Rawat. Of the three Mahar families, one is an *ex*-Kotwar, having become a tenure-holder, owning nearly 15 acres of agricultural land in the village, and is without any subsidiary occupation. The other two families still continue to adhere to their traditional occupation, viz., beating drum and playing on Mohari, but neither of them are engaged in weaving the hand-made cloth on the looms, as is the case with the Mahar of other village in Bastar. However, the services of these two Mahar families settled in the village of Marenga are required, mainly, on such festive occasions as the Mandai/Bazar fair-festivals, communal dances, etc., by the villagers as a while. It may be noted that the caste obligation of the Mahar living in the village of our study extend to several other villages, also, with the result that they get from all these villages in all 60-70 khandis of paddy annually, though from the Marenga village they are paid for their services nearly 6 khandis of paddy only. But for their other economic requirements, the Dhurwa of the Marenga village do not enter into a permanent relationship with other artisan groups, such as the potter (Kumhar) and the weaver (Mahar). The Dhurwa who are themselves preparing the bamboo baskets of various shapes and sizes, do not have any stable and well-established cliental relationship with other ethnic groups. Generally speaking, the earthen pots for common use are purchased by the Dhurwa and others living in the village of Marenga from the Kumhars of

Puspal village either directly in the Leda weekly market or at Puspal, or through the intermediaries. The hand-made clothes worn by the Dhurwa, etc., of the village are purchased from the Mahar pedlars from Kodipal village, who also prepare them on the looms.

It will be useful to mention about the sale that takes place in the village as well as in the weekly markets soon after the harvesting season is over, when the members, belonging to different ethnic groups and living in other villages visit Marenga (as also other villages on their way), and directly sell their commodities in the village either in exchange of paddy or in cash. Thus during my field work in the village of Marenga, the following groups visited the village on different occasions for direct sale to the consumers:

1 Two separate parties of (Bison-horn Maria) Lohars from Kokanar were selling iron implements like the axe-heads, shades, cooking laddles, etc., in exchange of paddy;

2 Five Mahar pedlars from Ludkiras village were selling hand-made cloth on different occasions on cash;

3 A Rawat woman from the village itself was selling the *lai* (parched paddy) in exchange of paddy;

4 A Panar woman from Tongpal village was selling vegetables like *kalmal kanda,* etc., in exchange of paddy;

5 Two Sundi women from Tongpal village were selling the distilled liquor in exchange of paddy;

6 Two Mahar women from Permaras village were selling the earthen pots, which they had purchased from the Kumhars (potters) of Puspal, for paddy and

7 A Mahar woman from Tongpal village was selling salt and spices in exchange of paddy.

In the same manner, a Mahar woman from the village Maraenga itself was selling salt and spices to her customers both in the Marenga and in other villages. One San Bhatra woman was also seen going round the village to sell vegetables which she and her husband had grown in the kitchen garden in exchange of paddy. In addition, a large number of the Dhakar,

Kallar and Maria on their way from their respective villages were observed to be negotiating with the Dhurwa of Marenga about the rates of the (dried) tobacco leaves grown by them. Lastly, mention may be made that two Sikh pedlars from the Punjab were noted to be selling in the village of Marenga the collirium and so-called Aurvedic medicines which were kept inside a tin box.

But it may be remarked that, judging from the point of view of the transactions of goods, the weekly markets are more important than the direct sale of goods to consumers in the village. The Dhurwa of Marenga visit most frequently the weekly market at Leda which lies two miles east of Tongpal. The sellers who come from Jagdalpur (35 miles north of Tongpal) and other surrounding villages, exhibit their wares for sale. Thus, it has been found on the basis of our (weekly) market study that the Dhurwa of Marenga village come into contact, both as sellers and buyers, with the following ethnic groups belonging to different villages:

Bhats, Bhumias, Brahminis, Chatris, Dhakars, Gadabas, Halbas, Jains, Kallars, Kayasths, Kumhars, Lohars, Mangans, (Bison-horn) Marias, Marwaris, Panaras, Raja Murias, Sundis, Telis (Sahu), and Thakurs. The main articles sold by the Dhurwa of Marenga village are paddy, rice, vegetables like brinjals, tomatoes, chillies, beans and tobacco leaves. Sometimes they collect gum from the Nistari Forest and sell the same in the market. Baskets made of bamboo are also prepared and sold by them. They purchase from the weekly markets such articles as salt, spices, head necklaces, cotton thread, ornaments for hand and ears, bidis, match box, washing soap, pottery, trinkets like toys, mirrors, locks, etc., handmade and mill-made cloth and ready-made garments. More of the weekly markets will be discussed later on; it will suffice here to note that there are some articles which are not only produced but also sold exclusively by particular ethnic groups, e.g., the German silver ornaments by the Gadawa, the earthen vessels by the Kumhar, the iron implements by the (Bison-horn Maria) Lohar, the handloom thick sheets of cotton cloth by the Mahar, and bamboo baskets (including the winnowing fans) by the Dhurwa. It may also be added that the Dhurwa of Marenga purchase, generally, the following articles from the below-mentioned ethnic groups and villages:

1 Cattle from Gidam or Jagdalpur markets;

2 Earthenwares from the Kumhar of Puspal and Kokawada villages;

3 German silver ornaments from the Gadawa (or Mangans) of Kokawada, Pushal, Sautnad and Palem villages;

4 Hand-made cotton cloth from the Mahar of Kodripal village;

5 Agricultural implements from the (Bison-horn Maria) Lohar of Guma (Kodripal) and Kokanar villages; and

6 Costly articles like the brass pots (*gagra*), garden spades, and ornaments are purchased from Jagdalpur markets from the cash earned by them after selling the baskets and tobacco leaves there at higher rates than prevailing in the nearby weekly markets.

The Dhurwa of Marenga village along with other ethnic groups belonging to the same village or drawn from other villages, work together in parties in the P.W.D. work which consists of digging the earth and spreading the same along with moorum on the roads. They also are engaged by the forest contractors, for instance, in February, 1958, a group of four persons, composed of two Dhurwas, one Rawat and one Lohar, was working in the Kikerpal village, being engaged in making the sleepers from the large sized timber. Thus, a Dhurwa comes into contact with a numbers of ethnic groups which are recruited from elsewhere. Mention may be made in this connection that towards the later part of field work (i.e., in April, 1959), a Muslim from Gorakhpur (Uttar Pradesh) had taken the contract of felling the trees in the forest in Kikerpal village. He had appointed his Muslim Agent in Tongpal for unloading the heavy timber carried in trucks from Kikerpal, as also, for loading the same in other trucks for onward transport to Dhamtari. The agent was, thus, required to recruit a large number of (unskilled) labourers. But since this sort of work entailed much hard labour and team spirit, so the labourers were found to be working in groups which were composed village-wise. Thus, in so far as the Marenga village was concerned, there were 15 Dhurwas, two (Bade) Bhatras, one (Bison-horn) Maria—all are working in one and the same group. Similarly, labourers from the Leda village consisted of Bhumias, Dhurwas, Rawats, Dru Gonds—in all fifteen. Thus, the Dhurwa of Marenga village come in contact, howsoever temporary, not only with other ethnic groups found near about their village but also with such people as the Muslim from Gorakhpur and his associates, and the Sikh drivers and conductors.

The Dhurwa of the Marenga village, also, enter into economic relationship with a number of ethnic groups who have taken up the work of preparing tiles for their houses. Previously, it was a (Bade) Bhatra, living in the Kana Para, who had monopolized this trade, but then a Kallar from the Hamirgarh village became his competitor so also a few Dhurwas have started preparing tiles for themselves on mutual co-operative basis. Recently, a number of the Christians from Jagdalpur have been entrusted with the work of preparing bricks for the school building, which is being built under the auspices of the Block Development. Mention may be made in this context that a permanent shop has been opened somewhere in 1955 on the road-side village of Tongpal by a Kayasth of Kanker. The local people living in and around Tongpal (including the Dhurwa of the Marenga village) purchase from this shop such essential goods of their everyday use as salt, sugar, jaggery, spices, kerosene oil, cocoanut, fried vegetables, bidis, etc., on cash. This shop also caters to the daily requirements of the bus passangers travelling to and from Jaldalpur, Sukma and Konta by providing them with tea, biscuits, fried vegetables, cigarettes bidis, plain water, etc.

With regard to the procurement of labour, the well-to-do Dhurwa of the Marenga village are found to engage the extra labourers either on temporary basis or as the Kamias (or kabadis). The labourers called the Kamias are those poor and landless people who attach themselves to a wealthy farmer in lieu of the lump-some cash money advanced to them to cover their marriage expenses, or they are allotted a portion of the agricultural lands to be cultivated for their own consumption and use. Unlike the purely temporary labourer, a Kamia is required to live in the house of his master and to work in different agricultural operation as well as in other household activities of his master. Most of these Kamias who are engaged by the Dhurwa farmers belong to their own fold—some distant kins but there were, during my field work in the village, three boys belonging to the Bhatra, Lohar and Rawat families of the village. Their respective fathers were granted a portion of the land for cultivation by three Dhurwas of the Marenga village. So far as the temporary servants are concerned, they are recruited for the most part from the same village and belong to all the ethnic groups settled in the village under our study. While it is intended to discuss the tenants and tenure-holders under the chapter on Economic Organization, we may briefly state here that instead of the share-cropping, the agricultural land in the Marenga village is given to others for cultivation in three ways—(a) the land being in the name

of a single tenure-holder (*patta-dhari*), it is he who distributes unequally though his agricultural holdings among his co-sharers who are required to make the proportional contributions towards the government dues imposed on the farmer. Though some of these co-sharers (*shamil kashtkar*) are (wrongly) treated as the tenants by the tenure-holder, still they belong necessarily to their own community, (b) mention has already been made as to how the well-to-do Dhurwa tenure-holders allot some portion of their land-holding to the Kamias in lieu of free service, (c) land is sometimes given to tenants for cultivation on economic considerations; but, significantly enough, no Dhurwa tenant has been engaged by a wealthy Dhurwa farmer on this basis. It may, however, be pointed out that there are two Dhurwa tenants of this category, who are cultivating the land belonging to a Bhatra widow and a Rawat, respectively, while a (Bison-horn) Maria is a tenant-cultivator of a Mahar tenure-holder, and the Kotwar's rent-free land is cultivated by seven tenant-cultivators, one of whom is a (Bison-horn Maria) Lohar and others being Dhurwas.

The following are some of the cases which involved the Dhurwa of the Marenga village with other ethnic groups, in so far as the transactions in agricultural land are concerned:

1 One Rawat got land (free of cost) belonging to a Dhurwa mutated in his name;

2 Three years ago, one Dhurwa purchased a plot of land at Rs 300 having an area of 3.30 acres from a Mahar;

3 One Rawat got land surrendered by a Dhurwa, free of cost, entered in his name;

4 One Dhurwa got land surrendered by a Kallar, free of cost, entered in his name;

5 One Dhurwa got land surrendered by a Maria, free of cost, entered in his name;

6 One Maria got land surrendered by a Dhurwa, free of cost, allotted to his name.

Concerning the loan (*murra*) of paddy, the Dhurwa of the village recognize two types: (a) distress loans which are taken either for bare livelihood or to defray the funeral ceremonies; and (b) loan used for performing the marriage or as the paddy seeds. While no interest is charged for the first type of loans, the

borrower is required to pay one and half times, in all, when repaying the original loan taken for the second type of loan. There are not less than ten paddy lenders in the village who lend paddy to the needy borrowers; while nine of them are Dhurwas, there is only one Rawat described as a paddy lender. Needless to mention, the borrowers belong to all the ethnic groups, living inside and outside the village of Marenga. It has been already pointed out that some of these borrowers who take money on loan, prefer to repay by means of service and are called Kamias (or Kabadis).

The pattern of socio-ritual inter-actions between the dominant group of the Dhurwa of the Marenga village and other ethnic groups settled in the village as well as residing outside, take the following forms:

There being no formality constituted panchayat in the village, what take place, in actual practice, is that the village elders assemble together to arrive at a decision regarding the matters of common interest to the village or to resolve such diputes between the opposite parties that are brought to their notice. The village elders (siyan) generally consist of the heads of the families or their representatives and belong to various ethnic groups of the village, namely, Dhurwas, Rawats, Marias, Bhatras Lohars and Mahars. We will discuss the composition and the function of panchayat later on. In the meanwhile, it may be noted that occasionially some well-known persons from outside the village, e.g., Dhakar (*ex*), Pargana Manjhi of Hamirgarh or the Mahanti (*ex*) Dafedar of Tongpal, are specially invited to participate in the deliberations of the village panchayat meetings. The ailing and the troubled Dhurwas of the village have also been observed to enter into a rather stable and mutually satisfying relationship with the medicinemen (*guneya*). There are in all ten medicinemen in the village. One of them is a Lohar, other is a Maria, yet another is a Mahar, while the rest of them are the Dhurwa. All of them, irrespective of their ethnic-wise affiliations, are well-known for their skill and power, and command an extensive practice, both inside and outside the village. Some of them being tied to different families who belong to different ethnic groups in the village. Thus, a Maria (Gond) medicineman was called on 17.2.58 by the Dhurwa (Pelac) to help his wife to get relief from the pain in her back; then, on 2.3.58, a Dhurwa medicineman was called by the Rawat to ward off the afflictions caused by the malevolent spirit called Rau; again, the services of a Mahar medicineman were required on 30.12.58 by a Dhurwa in connection with his daughter's illness.

In so far as the rituals connected with the harvesting of paddy fields are concerned, some Dhurwas of the Marenga village have clientele relationship with all those owner-cultivators who belong to other ethnic groups than their own. Thus, the Dhurwa affiliated to the various jama (kin groups) of the dominant clan of the village are required to perform the necessary rituals (locally called caru) for the eleven non-Dhurwa tenure-holders of the agricultural land in the village, as the following list would show :

1 The Pelac of the Marenkheria segment for the Mahanti, Mahar, Maria and Bhatran widow (4 in all);

2 The Pelac of the Tippin Palia segment for the Rawat and Mahar (2 in all) ;

3 The Dora of the Marenkheria segment for the Rawat (3 in all) and

4 The Borka of the Marenkheria segment for the Rawat (2) in all).

Mention may be made that for the services performed by the concerned Dhurwa, the non-Dhurwa tenure-holders are required to offer one bottle of distilled liquor as well as a portion of the chicken sacrificed on the occasion. In a similar manner, it is customary for the Dhurwa of the Marenga village (who act through their Pelac) to fix the marriage posts in the Rawat marriages ; likewise, on the Rawat marriages, it is a Kumhar who is required to furnish seven earthen vessels, while a Panara is expected to prepare a crown (*maunr*) for the bridegroom out of chind leaves, and a Dhurwa is required to supply the bamboo baskets and bamboo fan on that occasion. Similarly, the Dhurwa of the village are dependent upon the Rawat for the supply of milk (*gau-ras*) whenever any puja is offered in their respective shrines by (Dhurwa) priests. It has also been reported that whenever the dead body of a Dhurwa is to be buried in the grave, the liquor to be poured over should be distilled from mahua (irpul) by a Kallar, if the same is not available then simple water may be mixed in mahua, and the same be poured over the dead body.

During the Dhurwa marriages, as also, when feasts are arranged on the occasion of the death anniversaries (cutak), the members belonging to different ethnic groups are invited, though they are served according to their ritual ranking, namely, a Rawat is given plain rice, salt, spices, etc., while the Maria, Mahar and

Lohar take the cooked food and rice bear from the hands of the Dhurwa. In a similar fashion, other ethnic groups invite the Dhurwa of Marenga to attend their marriage ceremonies and other social functions when the members belonging to the lower groups give plain rice, etc., prepared by themselves to the invited (Dhurwa) guests. Then, the annual cycle of festivals (arranged inside the village or by a cluster of villages or Pargana-wise) draws together the Dhurwa of Marenga village with other ethnic groups belonging to different villages. In the communal feasts arranged in connection with such annual Ceremonial Hunting, Sowing the Rice Seeds, New Mango Eating, etc., the ovens are arranged separately for the higher caste groups (e.g., Rawats, Kallars, etc.), but the members belonging to the lower ethnic groups have no hesitation in accepting the cooked food from the hands of the Dhurwa. It is, however, during the Pargana Mandai/Bazar fair-festivals that the Dhurwa of the Marenga village come into contact with a large number of the regional Hindu groups who participate in the large-scale annual fair-festival. Mention may be made in this context that the mediums (Sirha) belonging different ethnic groups (e.g., Ghasia, Kumhar, Dhakar, Kallar, Dhurwa, Maria, etc.) are taken in procession on this fair-festival, and the participants who come from various villages and belong to different ethnic groups, bow down before these "possessed" Sirhas, irrespective of their group affiliations because the particular medium is not mentioned by his name or ethnic group but by the deity under whose "possession" he remains for the time being.

Yet another medium of social inter-action mediating between the Dhurwa of Marenga and the various ethnic groups living within and around the village is provided by means of the popular amusements like the cock fights, dances and dramas. The venue for the cock fights in the area of our study is in the original settlement of Tongpal village, being held for 3-4 months (November-December) in the after noon. A random sample of the participants in a cock fight shows that the Dhurwa of the village come into direct contact with the members belonging to such ethnic groups as the Bhumias, Dhakars Gonds, Halbas, Kallars, Mahars, Marias, Murias, Sundis, Telingas, Panaras, Telis and Rawats. With regard to the dancing and singing, while the Kurwal (Gurgal) and the older dancers and singers of both the sexes belong exclusively to the Dhurwa community, the cherta dance is participated by members of various ethnic groups. In a cherta dance, young boys and girls, as also grown up men, visit different villages and dance in front of the houses belonging to various ethnic groups, and *vice versa,* the Marenga villagers visit the adjacent

villages, and dance and sing the cherta songs. Thus, during the course of my field work in the village of Marenga, the cherta parties were composed of different occasions of such ethnic groups as the Dhakar, Panara, Maria, Muria, Lohar, Halba, Rawat, Bhatra and, of course, Dhurwa. Different purview of the oler dancers and singers of both the sexes from the surrounding villages would also visit the village of Marenga once a year, and be given paddy, etc., by different householders (including the non-Dhurwas). Similarly, the Mandai dancers would go from village to village and perform their dances to the delight of the people belonging to various ethnic groups. The Gurgal (Kurwal) dance is performed by the Dhurwas of both the sexes, according to the mood of the story sung by a Dhurwa. It is performed during the cold nights of winter inside the village in an open enclosure. Sometimes, instead of the Gurgal dance, a Dandar dance is played by a group of dancers, numbering 15-20 under the leadership of a Dhurwa. It was stated that the Dandar dance was enjoyed recently by Marenga villagers from a Dhurwa of Mohpaddar village. The dancers of the Dandar dance in the village of Marenga were found by me to consist mostly of Dhurwas, though a Lohar and a Rawat also were found on more than one occasion to be dancing, while three Mahars were playing on their drums and Mohari to the accompaniment of the dance, in addition to the drums played by the Dhurwa.

It may be added that the festival of the *Holi* which was played in Tongpal by the Government Officials, and other Hindu caste groups (including the Muslim Forest Official and the Christian Gram Sevak), was enjoyed from a distance by the Dhurwa of the Marenga village, though it was the Dhurwa (Pelac) of the Marenga village who was required to offer the "man" (respects) to the Mati before the fire for the celebration of the Holi was lit. But when a party of the dancers and singers composed of 22 men, from Udaigiri (Orissa), belong to Halba and Bhumia ethnic groups arrived in Tongpal on 23.3.59 to perform their dance-drama (*nat*) and sing the songs in Oriya language, the people living in and around the Tongpal village (including the Dhurwa of the Marenga village) went to attend and enjoyed the different sequences of the nat.

After stating the above-mentioned details of what goes on through various media of contact among the different ethnic groups living within and outside the village of our study, we may now proceed to note the resultant ranking system among the various ethic groups in the regional set up of the caste hierarchy.

In order to know the degree to which the concept of ritual pollution in inter-ethnic relationship is mantained, we shall have to examine what things (i.e., food, drink, etc.) may be accepted from various other ethnic groups. It may be remarked in this connection that although one of the Dhurwa folk songs mentions as many as thirty ethnic groups, still the Dhurwa of the Marenga village have direct contact with and hold definite views on the relative ritual status of the following (fifteen) ethnic groups only :

1 Brahmin (Bahmana) ;

2 Dhakar *alias* Chatri (Dakad) ;

3 Rawat (Gadid) ;

4 Kumhar (Kumhal) ;

5 Panara ;

6 Halba ;

7 Kallar (Kadeli) ;

8 Sundi (Cundi) ;

9 Bhatra ;

10 Muria (Raja or Zat) ;

11 Bison-horn Maria (Boyid) ;

12 Bison-horn Maria Lohar (Kamhar) ;

13 Mahar (Tula) ;

14 Mangan and

15 Khati.

In conformity with the general regional practices, the Dhurwa living in and around the village of Marenga regard the first eight groups as belonging to the Hindu fold, while the remaining seven groups (including themselves) are stated to be non-Hindu. But, curiously enough, though the Bhatra are counted as non-Hindus, still they are assigned (along with the first eight Hindu groups) 'higher' status in the ranking order than themselves. The result is that the Dhurwa accept cooked food (including the rice gruel), fried articles like the bobu, etc., puffed rice, drinking water, distilled liquor and tobacco mixed with lime from the hands of the above-mentioned (nine) 'higher' groups. While the Raja Muria are regarded by the Dhurwa as 'equal' to themselves,

inasmuch as the members belonging to both these groups are expected to take from one another cooked food, drinking water, etc., the remaining five groups are placed by them as lower to themselves. Further, they are definitely of the view that the Brahmins occupy the highest rank in the caste hierarchy, but it was not possible for them to determine the order of ranking among the other eight 'higher' ethnic groups. So far as the 'lower' groups are concerned, they would classify them in two categories, namely, 'lower' to themselves and the 'lowest' of all. Thus, according to the Dhurwa informants, the ranking order in the regional hierarchy of the above-mentioned ethnic groups would be arranged as follows:

Highest	Brahmins
Higher than the Dhurwas	Dhakars, Rawats, Kumhars, Panaras, Halbas, Kallars, Sundis and Bhatras
Equal to the Dhurwas	Raja (or Zat) Murias
Lower to the Dhurwas	Marias and Lohars
Lowest	Mahars, Mangans and Khatis

It has been mentioned that while the Dhurwa have no hesitation in accepting food and drink from the hands of the above-mentioned nine ethnic groups, the 'higher' groups, in their turn, would not accept cooked food, fried articles and puffed rice from the hands of the Dhurwa, although they are not sure about the reactions of the Kumhars. So far as the drinking water is concerned, almost all the 'higher' groups would refuse to accept it if it is offered by a Dhurwa, but most of Bhatras and Sundis would not mind to accept plain water from the hands of the Dhurwa, while some Halbas would be prepared to drink water from a Dhurwa, if the same is mixed with milk and *gur* (i.e., served as *sherbet*). While a Dhakar would hesitate to drink distilled liquor if a Dhurwa offers it to him, the reactions of the Brahmins and the Kumhars (who are expected to abstain from taking wine) are not known, but the rest of the higher groups would freely accept the distilled liquor from the hands of the Dhurwa. Concerning tobacco powder mixed with the lime, it is generally accepted by all the 'higher' groups from the hands of the Dhurwa. In a similar fashion, the Dhurwa of the Marenga village will not ordinarily accept cooked food, fried articles, drinking water, mixed tabacco powder, distilled liquor and puffed rice from the hands of the 'lower' groups. It is the only exception in the case of the Mangar that the Dhurwa accept puffed rice (*Lai*) from them.

The 'lower' groups, in their turn, accept without any hesitation cooked food, drinking water, fried articles, puffed rice and mixed tobacco, etc., from the hands of the Dhurwa. In this connection, mention may be made that there were some Dhurwas in the Marenga village who were prefered to accept drinking water and mixed tobacco from the hands of the (Bison-horn) Maria, while such Dhurwa informants asserted that in the strict sense, any physical contact with the Mahar would not require immediate bath as well as a change of cloth.

Before we discuss the social mobility movements among the Dhurwa living within and outside the Marenga village, it may be worthwhile to state that the Sundis (like the Kallars) are distillers of wine; but since they are said to sprinkle (like the Doms) water mixed with turmeric paste by means of leather made from the cowhide during their marriage ceremonies, and so they are referred by the 'higher' caste Hindu (contemptuously) that the term of Lanks Dom. The Sundis, while admitting that they entered Bastar from outside, claim that it was their ancestor (who is called by them Jatayu) who had given a taugh fight to Ravana when he had forcibly taken away Sita to Lanka (Ceylon). It is asserted by them that in recognition for his services Jatayu was granted boon by Rama to the effect that his descendants would always remain rich. In fact, the people around them corroborate that the Sundi women are always found to have plenty of gold ornaments on the different parts of their bodies. However, of all the ethnic groups living in the area of our study, it is the Dhakar who claim to identify themselves with the Kshatriyas (Chatris). They not only worship the *tulsi* (basil) plant and perform the Satya Narayan Katha through the Brahmin priest, but also observe the facts on Shiva-ratsi, etc. Some of them are said to have given up their traditional practice of cross-cousin marriage; instead, marriages are arranged among them on the basis of the compatibility of the stars, as read by the Brahmin priest-cum-astrologer. They, however, take neither pigs nor chicken, but only mutton and pigeons. As compared to the Dhakar, the Dhurwa living in and around the village of Marenga are not consciously involved in aspiring for high position in the Hindu hierarchy of castes. But there are definite and unmistakable trends towards the prohibition of customs which are regarded as low by the neighbouring Hindu caste groups.

In the first instance, all the Dhurwa, irrespective of sex and age, abstain from taking beef. In fact, according to them, all those who take beef are regarded 'low' in the regional caste

hierarchy, namely, the Bison-horn Maria, the Lohar and the Mahar. Secondly, in the village of our study, there are a number of the Dhurwa who have given up eating pork as well. Although there are various social functions and life cycle ceremonies when pigs from an important item of their diet ; but even on those occasions special arrangements are made for those Dhurwas who abstain from taking pigs. Thirdly, some of the Dhurwa who abstain from taking pork have also given up completely the habit of drinking wine which is distilled from the mahua fruits. They believe that wine is *adra* (i.e., bad in every sense of the term) ; but it may be pointed out in this regard that they have no objection in drinking the intoxicating drinks like the landa (rice beer) or the sulphi. The result is that in a ceremony where wine forms an important item, these Dhurwas are served with landa or sulphi, as a substitute for wine. As regards junior leviration, some of my (Dhurwa) informants were positive in their assertion that this custom does not exist among them, for, it is claimed by them that the widow of an elder brother (andil) was like a mother (iya) to the younger brother of the (deceased) husband. In any case, there are only two instances in their marriage records where a distant classificatory younger brother had entered into tika form of union with the widow of his elder brother. A few cases of the elopement that came to my notice are definitely looked upon by the elderly Dhurwas of the village as has been mentioned earlier. But, it may be added in this context that a typically Hindu term, viz., Lakhi (Lakshmi) is used by the Dhurwa alternatively for paddy (vercil). Even in their kinship terminologies, such Halbi terms as Susra for the wife's elder brother (*porid*) and Batu for the cross-cousin (male) instead of ayil, are used frequently in their daily conversation.

It will not be out of place to state the following particulars in connection with the customs followed by a group of families belonging to the Dhurwa community living in the Leda village which lies about four miles from the village of Marenga. My informant, Sita Ram, belonging to one of these families, has stated that it was his grandfather (Fa Fa) who had originally come from Kakulgar village. Sita Ram's Fa Fa and Fa Mo had taken the *mantra* from a (Bairagi) *Guru* from Orissa with the result that both of them had become Bhagats, i.e., they used to put on the tulsi beads and had given up eating meat, while on every Monday and Thursday they would eat their meals only once in the evening. It was further reported that for the last two generations, the particular lineage group has given up eating pigs ; neither is the rice beer prepared in their homes even during the

festive occasions instead, the distilled liquor and/sulphi is served to the invited guests. For that matter though group dancing by their womenfolk is indulged, the beating of drums by their menfolk has since long been discontinued in their families. It may also be stated that none of them can speak their mother tongue (viz., Parji) ; instead, Halbi/Bhatri is the medium of conversation even in their homes.

It may be added that Sita Ram is affiliated to the Cobra clan, and (contrary to the normal custom among the Dhurwa) he possesses two images of the cobras—the male image is made of silver and the female image is made of brass, but both of the images have raised hood with two prominent eye-balls and rolled tail. Every year on the Janam Ashtami Day, these two images, representing as they do their ancestors, are worshipped by him after these are cleaned in plain water, when leaves of *bel* are put on them as well as plain rice is kept on their heads. Thereafter milk is placed in front of them, and an egg is also kept between these two images. It was reported that a cobra is never killed by them ; in fact, they are required to place an egg at a safe distance whenever any of them happens to see a cobra. It may be remarked that (unlike the Dhurwa of the Marenga village) the lineage group to which Sita Ram belongs observe the custom of putting the crown (which is made of chind leaves by the Panaras) on the heads of the bridegroom and the bride during the marriage ceremonies. One also finds the tulsi plant arranged on the top of a brick-built platform at the back of their houses in Leda, while the verandah of Sita Ram's house is decorated with pictures of Hindu gods and goddesses, like Ram, Shiv, Lakhmi, Hanuman and Vishnu. Further, since he possesses the almanac (*panchang*) and can read and write Hindi, so quite often the Dhurwa, the Rawat, the Mahar, etc., from the surrounding villages consult him about the auspicious day for sowing the seeds, harvesting of paddy and construction of houses.

While the deceased mother of Sita Ram was said to observe the fast on every Thursday (Lakhim var) by taking her meals only once in the evening, Sita Ram observes the same kind of fast on every Monday in honour of the god called by him Shivjee or Mahadev or Shankarjee. His father also observes the fast twice in a week, viz., on Mondays and Thursdays while his wife abstains from taking meat, fish, etc., on these two days in a week. He performs the Satya Narayan Katha through a Brahmin once a year and has been (along with his wife) to such pilgrimage centres as the Katumsar and Tirathgarh, though others in his lineage

group have visited the distant place of Bhadrachalaw. Then, again, as compared to the Dhurwa of the Marenga village, Sita Ram's lineage group observes the following customs in connection with the ceremonies regarding life-cycle activities :

Name-giving Ceremony : In front of the mother holding newly born baby on her lap, a metal vessel full with water is kept ; at its top mango leaves are placed and then a brass pota is put on it ; above the lota containing water an earthen lamp with five wicks is kept. As already pointed out, the Dhurwa of the Marenga village do not have any of these articles kept during the name-giving ceremonies.

Marriage : Instead of the rice-measuring ceremony, Sita Ram's lineage group requires the bridegroom to find the finger-ring which has been hidden by the bride inside the mud ; and then the crowers (*maunr*) made of the chind leaves are placed on the respective heads of the bridal couple.

Death : On the demise of father or mother, the sons are required to shave off their hair of heads (as also, the moustache, if any) not through the aid of barbers, but by their affines (saga). So also, it is the effinally related kins (and not their consanguineals) who are required to cook meals on such occasions as the death anniversaries of their dead even the *Bhandarin* (one who looks after the store and keeps account of all the articles received by and given to the kins connected by blood or marriage) is selected from the affines. But nothing of the sort prevails among the Dhurwa of the Marenga or other surrounding villages.

CHAPTER EIGHT

ECONOMIC ORGANIZATION

For a proper understanding of the economic organization of the Dhurwa of Bastar, it is worthwhile to examine the salient features of land revenue system prevalent in the area to which the Dhurwa dominated village of Marenga belongs. It has already been stated that the village of Marenga formed a part of the Hamirgarh pargana which was included under the Sukma Zamindari. The Zamindar of Sukma who was a subordinate chief of the Maharaja of Bastar, was empowered with certain judicial powers (including those connected with the revenue collection, allotment of land and management of excise and forests). Though he also enjoyed the proprietory rights over all the lands in his estate (zamindari), still he could not transfer any land or village by sale, gift or mortgage without the permission of the Bastar Maharaja. However, with the abolition of the Zamindari system in Madhya Pradesh State in 1951, not only the Zamindar of Sukma was paid the cash compensation for the rights previously exercised by him but also all the lands under his personal cultivation were settled with him, while the rest of the lands (including those in the Marenga village) were transferred to the tenants concerned. The result was that the Sukma Zamindari was constituted into the Naib-Tahsil of Konta tahsil of Bastar district of Madhya Pradesh State.

In conformity with the practice in Chhatisgarh, the plough (*nagar*) was taken in 1856 as the unit of measurement for land settlement in Bastar. While the plough represented previously the area of land kept in cultivation with a pair of bullocks in one season, efforts were made in 1898 to estimate the seed capacity of each field of the tenant ; these estimates were then translated into nagars (ploughs) and were checked by actually counting the village cattle. Later on, regular settlement operations were carried in 1904, but while the cadastral surveys were confined to the developed portions of the Jagdalpur tahsil, in the summarily surveyed tahsils and zamindaris, the assessment continued to be made by the plough rates only. But then it was realized that in order to increase the land revenue, the rents should be increased, hence resettlement was started in 1937-38 to assess the lightly assessed or unassessed (*bila lagan*) land, as also to level up the existing rates. So far as the Sukma Zamindari was concerned, it

was observed during the resettlement work that the cultivation resorted to in these 'backward' villages was both sparse and unstable in nature ; as such the villages in these 'wilder' zamindaris were considered by the Settlement Commissioner to be suitable for the Masahat or Inexact Survey. Accordingly, for the Masahati villages (like Marenga) no traverse data (i. e., the permanent fixed points) have been prepared with the result that the boundaries of the villages of Marenga are not demarcated, except where these adjoin the cadastrally surveyed village of Tahakwada in Jagadalpur tahsil. Then, again, in view of the fact that no special survey has been arranged since 1937-38, the numerous changes that have occurred since then (e. g., unoccupied waste land taken up for cultivation, outlying fields permanently cultivated and the growth in numbers of the plots in occupied land) have not been accurately plotted on the village map. Similarly, fixed portions are not allowed in the village for the burial grounds, shrines, wells and the house sites. Of course, the shapes and areas of the rice fields are represented in the village map ; but their position is plotted approximately, being arrived at, by eye appraisement without reference to traverse marks.

So, the present position with regards to the village of Marenga (and other Masahati villages of Bastar) is that neither the area of the house sites nor that of the unoccupied land (including that of the Nistari Forest, etc.) is known accurately. In a similar manner, such topographical details as were omitted in the last settlement in 1937-38 or have come into existence since then (e. g., the new house sites, shrines, burial grounds, grazing land, cattle stand, village paths and other communal lands) have not been plotted on the village map. Similar is the case with regards to the substantial improvements made, namely, the embankments or wells supplementing the sources of irrigation or used wholly for domestic purposes, both in the fields and house sites. Only the occupied agricultural land is shown in the village map ; even there a connected area of land held by one person is treated as a single field, however, many plots (*dolis*) it may contain. Thus, the total area of the village of Marenga is entered in the relevant revenue records as the total forest area (234·85 acres), permanent pastures and other grazing land (17·43 acres), other uncropped area (22·73 acres), the land actually put under cultivation (603·08 acres) and fallow land (87·90 acres).

On excluding the fallow land (i. e., land which is not sown either for one year or for more than one year but upto five years), the net area under cultivation is recorded as 603·08 acres which

form 62·42 per cent of the total area of the village. It has been previously stated that neither the area of the forest land (which forms approrimately 24·32 per cent of the total area of the village) nor that of other uncropped land (22·73 acres) is known accurately for the Masahati village of Marenga. All that has been mentioned with any degree of certainty in the relevant revenue records (namely, the Jama bandhi) of the village is that the total area of all the occupied or owned land holdings is 630·13 acres. Strictly speaking, the total area of such holdings should be the sum total of the cropped area, fallow land and other uncropped but occupied land, which would come to be nearly 700 acres. But so long as a special survey is not arranged to incorporate the necessary corrections, we have no other alternative but to accept the total area of the occupied land as 630·13 acres. It may, however, be pointed that the total area of the occupied land in the village of Marenga includes not only the land which is used in actual cultivation and/or kept fallow but also the house sites as well. And, according to the report of the Patwari, the total area under actual cultivation (including that of the double cropped area which is estimated in 1954-55 to be 25·40 acres) was 628·48 acres where different crops as also other garden products were raised, as shown below :

1 Food grains			
Paddy	..	510.12 acres	
Ratel millet	..	12.09 ,,	
Koyla ,,	..	10.97 ,,	
Kakal Jondri ,,	..	2.64 ,,	
Kadi ,,	..	1.00 ,,	
Maize ,,	..	2.89 ,,	
			539.71 acres
2 Pulses			
Kalkul	..	53.27 acres	
Mung	..	4.65 ,,	
Urud	..	1.55 ,,	
Tuwar	..	0.50 ,,	
Matar	..	0.30 ,,	
Seem	..	0.48 ,,	60.75 ,,
3 Oil seeds			
Mustard	..	15.79 acres	
Sesamum	..	0.60 ,,	16.39 ,,
4 Tobacco			7.05 ,,
5 Vegetables, condiments, etc.			4.58 ,,

It is evident from the above figures that as much as 85·8% of the total cropped area in the village is used for growing the food grains (96% of which is in the form of the paddy), while the rest of 14·2% is used for growing the pulses of different descriptions (9·4%), oil-seeds, tobacco and other garden products. Obviously, the above-mentioned kinds of crops cannot be grown in the same type of land. In fact, the people living in and around the village

of our study classify their agricultural lands into the following major categories :

1 The low-lying embanked land called the Vaya or the beda, surrounding the crests of the undulating portions of the village (containing the house sites) and stretching in an almost unbroken line towards the north and south of the village. It is further subdivided into the (i) gabar, i. e., the low-lying land receiving more than its share of the moisture on account of its relative position on the land surface, and (ii) mal, i. e., the relatively level land receiving its fair share of moisture and (iii) tikra, i.e., the uneven land which does not retain its fair share of moisture.

2 The high uneven land, lying at the foot-hills of the Dangar Candi, is called marhan.

3 The level, fenced-in land lying adjacent to the homesteads, is called vada or gorla or bari which remains fertile on account of the accumulation of the cow-dung and other refuse heaps.

4 The small sized garden plots situated on the upper banks of the Zairam (or Baru) river is called kudur or attar or launka.

The relative importance of the above-mentioned six categories of the agricultural lands is recognised by the people, living in the village, who estimate their respective (average) values in varying terms, as the following figures show :

Category of land	Value (in rupees per acre)
1 Attar	150
2 Gabar	100
3 Bari	100
4 Mal	80
5 Tikra	60 to 70
6 Marhan	30 to 50

The Attar is exclusively used for growing such cash crops as the tobacca, brinjals, tomatoes, chillies, etc. These crops are watered from the unbricked wells built in the sandy river banks, being worked by hand by means of the water lift arrangements. In fact, the garden plots made in the attar agricultural land of the village comprise the only irrigated area of the village, which is calculated to be 9·47 acres. It may be added that, in the area of our study, the new virgin lands lying at the foot-hill of the Dangar Candi are brought under cultivation by the villagers by burning

the trees and other brush-wood lying there; and such high and uneven lands as were brought under cultivation by the villagers by burning the trees and other brush-wood lying there before 25.3.54 have been declared as the Marhan lands; when, however, these marhan lands are properly embanked by the villagers, these are officially referred as the tikra. To a Dhurwa it does not matter whether all these high lands are called the marhan or the tikra for, he refers to both these categories by the term of mandum. While some parts of the mandum are left fallow for a year or so, others are cultivated with early paddy, millets and pulses. In contrast to the mandum lands, the bari lands are properly fenced and oil-seeds, pulses and vegetables are grown there. It is in the gabar and mal categories of land that almost all the varieties of paddy are cultivated.

It may thus be concluded that the pulses like urud, mung and arhar are sown alike in the bari and marhan/tikra in June-July and harvested in November-December. Similarly, the kosra and kodon millets, along with the maize and early varieties of paddy like baku, chatka and gudmal, are sown in the bari and tikra/marhan in May-June and harvested in September-October. But the kulthi and ragi millets, as also the chamel, are sown there in August-September and harvested from November to January. The oil seeds like sesamum and mustard, however, are exclusively sown in baris, being sown in July-August and harvested in December-January. For the rest, the following are the many varieties of paddy which are broad-cast in gabar and mal from May-June and harvested from October till December-January: Baku, Baigunda, Ciklel, Gadur, Jumka, Machkhena, Maipal, Motenga, and Potu. Regarding the double cropping, it is only in the manured baris lying near the respective households that the koyla or kadi millets are sown in May-June and after harvesting them in September-October, kalkul or oil-seeds are cultivated in the same area and harvested in December-January. So also are vegetables like pumpkin, gourd, etc., raised in the spare portions of the bari.

Let us now examine the distribution of the size of the occupied/owned land-holdings (including the house sites). While the Patwari has mentioned that there were 55 tenure-holders in 1954-55 in the village of Marenga, we have added three more to this list in order to include the latter changes that occurred uptill 1958-1959 as a result of the mutual transactions entered among the residents as well as the new plots of lands being allotted by the government from the unoccupied area of the villages.

Amount of land (in acre)	Number of the tenure-holders	Total amount of land (in acre)
Over 30	4	145.31
20.01-30	6	148.88
10.01-20	15	216.86
5 to 10	11	83.74
Less than 5	22	35.34
Total area owned by 58 tenure-holders		630.13

It is worthwhile to mention first that six of 58 tenure-holders of the village land reside outside the village of Marenga ; one of them is a Mahanti (an *ex*-Forester) owning 14.85 acres, other is a Mahar Kotwar having been allotted the rent-free service land of 15 acres, and remaining four are Dhurwas. The total area of the land recorded in their possession is 49.84 acres which forms 7.9 per cent of the total area of the owned land in the village. Secondly, the ethnic-wise distribution of 58 tenure-holders living within and outside the village of Marenga is as follows :

One (Bison-horn) Maria tenure-holder owning			..	9.00	acres of land
One Kallar (or Bhatra) widow	,,	,,	..	10.08	,,
One Mahanti	,,	,,	..	14.85	,,
Two Mahars	,,	,,	..	29.52	,,
Six Rawats	,,	,,	..	48.40	,,
Forty-seven Dhurwas	,,	,,	..	518.28	,,

The above figures show that while the non-Dhurwas own 111.85 acres of the occupied land in the village (i.e., 17.6 per cent of the total occupied land in the village), the rest of 82.4 per cent of the occupied land in the village (i.e., 518.28 acres) is owned by the Dhurwa living within and outside the village. It will also be significant to show how the land owned by the Dhurwa residents of the Marenga village (amounting to 498.29 acres) is distributed among the various kin groups (jama or kul) comprising the core of the Dhurwa population of the village and their affinally related kins. The following figures would speak for themselves :

Number of the tenure-holders	Kinship affiliations	Total area owned	Remarks
6	Neutak Jama	42.69 acres	Consanguines
1	Pelac Jama	40.27 ,,	,,
6	Dora Jama	76.99 ,,	,,
5	Kicek Jama	85.17 ,,	,,
6	Borka Jama	76.04 ,,	,,
24	Marenkherias	321.16 ,,	

Number of the tenure-holders	Kinship affiliations			Remarks
5	Tippin Paiias	50.11	„	Consanguines
8	Affines (Cobra)	69.74	„	Affines
6	Affines (Tiger)	57.28	„	„
43	Consanguines & affines	498.29	„	

Mention has already been made that it is the family (whether simple, joint or otherwise) which forms the basic co-operative unit of production, where all the adult members not only contribute to its support but also work under the direction and supervision of its head. It may also be added that the respective tenure-holders shown in the relevant revenue records act as the *de facto* heads of their families. Concerning the land-holdings owned by three widows, however, it may be pointed out that in the case of one it is her own brother who looks after the land, in another case her deceased husband's cross-cousin (who is the present Patel of the village) manages the same along with his own, and in the third case, her own croos-cousin attends along with other tenants to the cultivation of the land-holdings owned by her in the village. It will be quite fitting if we attempt to answer the question as to whether the ownership of the land remains individual and exclusive, unconditioned by the claims of their agnates, living with or separately from the tenure-holder. For this purpose, we must know what rights are conferred and what liabilities are imposed by (codified) law upon the tenure-holders and their tenants.

In the first place, a tenure-holder (locally called the patta-dhari) is declared to be a person who is held responsible for the payment of land revenue assessed on his holding. A tenure-holder may, if he so desires, give his land (or any portion thereof) to a tenant who may be a relative, friend or outsider, to cultivate on rent to be paid in fixed cash or in the form of labour/service or on share-cropping basis or absolutely on no consideration. A tenure-holder may, of course, be a Bhumi-swami or a Bhumi-dhari—the former holding absolute rights over all the trees standing on his holding, while the latter cannot fell or take such timber trees as the *sagwan* (teak), *sal* (sergi), etc., standing on his holding. A Bhumi-dhari in Madhya Pradesh State, however, could become a Bhumi-swami if he would deposit three times the revenue assessed on his holding; but in the district of Bastar this right was withheld by the government in 1955. The result is that in the village of Marenga there is only one Bhumi-swami, while the rest of the tenure-holders are all Bhumi-dharis. In any case, no tenure-holder (be he a Bhumi-swami or a Bhumi-

dhari) belonging to any scheduled tribes can transfer his right to any person who does not belong to one of the scheduled tribes. In a similar manner, the law makes a distinction between an ordinary tenant and an occupancy tenant on the ground that when the land is habitually leased to an ordinary tenant for a total period of three years or more during any consecutive period of five years (except when the tenure-holder of such holding is a widow or a minor), he can become an occupancy tenant, entitled to purchase the right in the land of a tenure-holder.

It may be noted in this context that no land in the village of Marenga has been leased in the recent years by a tenure-holder to any tenant for more than two to three years at a stretch ; even the land belonging to a widow is seldom given to a tenant for more than two years. Of course, there were a number of cases in the long past when the respective land-holdings owned by different tenure-holders were surrendered by them on different occasions on account of the 'forced labour', and other hardships meted out to them in the by-gone days. The consequence was that their erstwhile tenants (and/or others) managed to get themselves declared as the owners of the same. The conditions have, however, changed at present to such an extent that the people living in the village hanker greatly after the agricultural lands of their own. There are two interesting cases which show the keen desire felt by the village people in this regard. The village Kotwar who is appointed by the government for three villages of Marenga, Tongpal and Littiras, is alloted the rent-free service land (measuring 15 acres in area) in the village of Marenga only, and the Marenga villagers resent this injustice, for they feel that other two villages should have also contributed their shares towards meeting the Kotwar's remuneration. According to them, the land alloted to the Kotwar in the Marenga village proper could have been otherwise owned by some landless tenants in the village. In another case, it was rumoured that the (Bhatrin) widow of a Kallar, whose two sons had died recently, wanted to dispose the land owned by her in the village (measuring 10.8 acres) to somebody residing outside the village. But the people of the village oppose such a move on her part on the ground that it should be sold to some one in the village, preferably to one who does not own a land of his own.

Apart from these two classes (namely the tenure-holders and the landless tenants—the latter being referred as the Thota), another class of cultivators is recognized in the village of our study. It should be made clear that in the eyes of law when

there are more than one tenure-holders in any agricultural holding, such co-tenure-holders are jointly and severally liable for the payment of the land revenue assessed on such holding; further any co-tenure-holder can demand partition of his share in the common holding. But in actual practice we find that though the land-holding owned by a tenure-holder is apportioned among some, if not all, of his agnates, still it is the tenure-holder who not only holds himself responsible for realizing the total collection of the government dues (including the land revenue) from the respective agnates cultivating different plots of land-holdings, but also it is he who distributes different plots (*dolis*) in his agricultural holding among his agnates, who happen to be, like him, the heads of their respective families living separately. However dissatisfied these agnates may be with thier specific allotted portions in the (common) land-holdings, they do not openly demand the partition of their shares. As such, we would prefer to call these agnates of the tenure-holders as co-sharers rather than the co-tenure-holders in the legal sense of the term.

On an analysis, it is found that there are as many as 49 heads of the families living in the village of Marenga who are recognized by the respective tenure-holders as their co-sharers. Four of them belong to the Rawat ethnic group, being related to their respective land tenure-holders as brothers (3 cases) and as the son (one case). The rest of 45 co-sharers are Dhurwas, out of whom nine have recently got some plots of land allotted specifically in their individual names in the relevant revenue records though in no case the area of such lands does not exceed one acre thereby showing that these separate lands are essentially meant for their house sites. Obviously, their dependence upon the common land-holdings owned by respective tenure-holders has not thereby lessened to any appreciable degree. Two of these (45) Dhurwa co-sharers cultivate the land which though situated within the confines of the village is owned by a non-resident Dhurwa related to them as their own brother. Similarly, three of these co-sharers though living within the confines of the village cultivate the land lying outside the village but owned (in two cases) by their brothers and (in one case) by his father. Regarding the remaining 39 Dhurwa co-sharers, their relationship with their respective tenure-holders may be tabulated as follows:

Father-son: 4 co-sharers

Brother-brother: 17 co-sharers

Father's brother: 4 co-sharers

Brother's son : 2 co-sharers

Father's brother's son : 5 co-sharers

Father's brother's son's son : 3 co-sharers

Father's father's brother's son : 4 co-sharers

The above figures show that agricultural holding may be held in common among different families living separately from one another but whose respective (male) heads are related in 17 cases (i.e., 43.5 per cent) as own brothers, in 4 cases (i.e., 10.3 per cent) the married sons living separately from their respective fathers are cultivating the specific portions of the plots allotted by their father who is also the tenure-holder. Over and above these primary relatives (namely, brothers and father), the land may be held in common among the secondary relatives. Such an eventuality arises when one of the two brothers holding the land as the tenure-holder dies; then such a land is entered in the revenue records in the name of the surviving son(s) of the deceased with his father's brother(s) cultivating as the co-sharer (4 cases). But in the event of the death of the co-sharing brother, the sons of the deceased are taken as the co-sharers by the tenure-holder (2 cases). There are also cases when the co-sharers are related to the tenure-holder as the tertiary relatives, e.g., father's brother's son (5 cases), father's brother's son's son (3 cases) and father's father's brother's son (4 cases)—showing thereby that the commonly-held land-holding group may be extended upto the level of three generations. Apart from these definite cases, it also happens that the land-holding owned by a tenure-holder is given for cultivation to some of their 'distant' agnates—distant in this respect that the genealogical connections with the respective tenure-holder on the father's side cannot be traced or (even if traced) are related to the respective tenure-holders beyond the level of three generations. Since the tenure-holders do not accept such distant agnates as their co-sharers, but recognise them as tenants, so they have been excluded by us from being regarded as co-sharers from our purview.

In the light of the above discussion, it may be said that even if the land is declared at present to be owned by a tenure-holder in his individual capacity, it is the lineage that forms basically the land-owning group among the Dhurwa of Marenga village. To be sure, this land-owning group may vary in depth from 1-3 generations from the present day (male) heads of the respective families related to one another as the agnates. It is also obvious

that these (close) agnates are treated by the respective tenure-holders as their co-sharers, while those kins who are related to the tenure-holders by more than three generations are recognised as their distant agnates, without having any claim, as the co-sharers, on the otherwise commonly held land. Of course, this traditional picture of the Dhurwa society is being changed, for not only do the tenure-holders distribute the common holding among their co-sharers unequally, keeping a larger share for themselves, but also some of the co-sharers have recently managed to get the plots of land allotted in their individual names. Analysis of a number of cases concerning the devolution of agricultural land once held in common by a relatively small lineage group to the present day Dhurwa tenure-holders living in the village of Marenga through successive generations show that it is more by the individual efforts rather than on consideration of seniority in age that the land has been entered in the respective names of the tenure-holders. It may, however, be added that the daughters are excluded from inheriting landed property of the deceased father, according to the customary law of the Dhurwa. Then again, we find that the land is apportioned by the tenure-holder among his co-sharers unequally, for, sometimes greater number of plots of land are given to near relations (like own brother) than to the distant relatives (e.g., father's brother's son's son), although it is maintained by the respective tenure-holder that the unequal ds-tribution of land-holdings among different co-sharers is based on the relative size of the respective families of the co-sharers. In actual practice, however, we find that the tenure-holder reserves for himself the largest share in the best available land.

In any case, it is clear that not every co-sharer receives from the respective tenure-holder adequate land to meet his household requirements, not only because of the personal attitude of the tenure-holder with respect to his other co-sharers but also because the total area of the land owned is relatively small in size. On the basis of the land-holdings owned by different tenure-holders as shown in the revenue records as well as the actual distribution of the land-holdings among the co-sharers, it has been found that out of 121 families living in the village of Marenga, there are as many as 24 families (19·84 per cent) who do not have "sufficient land", either as tenure-holders or as co-sharers, to cover their household consumption. The result is that they cultivate the land-holdings belonging to others as their tenants or partly work as labourers. Among these, there is one Rawat family and the rest are all Dhurwas. In addition to them, there are 20 families (16·52 percent) who do not own any land at all. Among them, three

are (Dhurwa) widows who engage themselves mainly as agricultural labourers and/or have taken to some other occupations. While 13 of them (including the three widows) are Dhurwas, the remaining 7 are non-Dhurwas, namely, a Bhatra tenant who is also engaged in preparing the earthen tiles required for the house roofs in and around the village ; a Bison-horn Maria Lohar who has reduced his traditional occupation of black-smithy to a secondary calling but is mainly engaged in cultivation as a tenant ; a Raja Muria who calls himself a San Bhatra, a Bison-horn Maria and three Rawats all these three cultivate land as tenants, as also, work partly as agricultural labourers. Regarding 13 landless Dhurwa families, some of them have settled recently in the village of Marenga, while others are 'distant agnates' of the respective tenure-holders and are mainly engaged in cultivating as their tenants, as also, work as agricultural labours, like other landless non-Dhurwas.

Apart from these 44 familie heads who do not own any land of theirs or prossess insufficient land-holdings, there are as many as 59 families head (consisting of 21 tenure-holders and 38 co-sharers) who are said to have 'just sufficient' land-holdings to cover their domestic requirements with the result that in actual practice very few of them feel any need to go in for any other occupation other than that of attending mainly to their land-holdings. Among them, there are nine Rawats, one Bison-horn Maria, one (Bhatrin) window of a Kallar, and the remaining 48 are Dhurwas. Then there are as many as eleven family heads who are regarded as owning 'sufficient' land-holdings—firstly because they have not too many co-sharers to be allotted the respective portions of land and secondly after distributing the land-holdings among their co-sharers, the remaining land-holdings in their possession is leased out to the tenants for cultivation. It may be remarked that these tenants are found in a large number of cases to be related to the tenure-holders as their distant kins by blood or marriage (Kutamb or Saga). In fact, it is the agricultual land possessed by these eleven tenure-holders (as also by the two non-resident tenure-holders of the village land) which is regularly cultivated by the above-mentioned 44 family heads, purely, as their tenants. It may be added that excepting for one Mahar tenure-holder residing within the village of Marenga, the rest of the eleven 'surplus land' owners are Dhurwas. In the case of the Mahar tenure-holder, it should be mentioned that he has leased out almost all his land to a number of tenants, Dhurwas and others, on the basis of rent paid in fixed cash or to be adjusted towards the repayment of loan which he habitually takes on different occasions.

So, then, whatever be the nature of the tenancy held by the above-mentioned 144 family heads (out of 121 families settled in the village of Marenga) all of them are actively and gainfully engaged in agriculture as owner-cultivators, tenant-cultivaiors or landless agricultual labourers. The remaining seven family-heads who are not directly engaged in tilling the soil are, firstly, a Bison-horn Maria Lohar who is mainly engaged in his traditional occupation of black-smithy, secondly, two Mahars who have given up their traditional occupations of spinning but continue to be drummers, and, thirdly, four Rawats who still continute to be the cow-herds of the village, in accordance with their traditional calling. It is, thus, evident from the foregoing account that as many as 94·21 percent of the total number of families residing in the village of Marenga are directly occupied in agricultural pursuits, which fact shows that agriculture forms the basic economic structure in the area of our study.

Judging from the point of view of the total area cultivated, rice forms the most important crop. Not only does it constitute the main staple diet of the people in the area of our study but it is used also by the people in various transactions, e.g., in exchange of commodities on barter, in payment of the wages and services, in preparation of the rice beer, both on the ceremonial occasions and for everyday use. Let us, therefore, describe the various techniques involed in the cultivation of rice in so far as the village of Marenga is concerned. In the first place, it may be noted that the permanently embanked rice fields in the village are cultivated year after year, without being left fallow, except a brief period of 3-4 months. These are irrigated during the rainy season by a number of hillside water courses; but no manures are applied, except in the form of droppings left by the cattle after the harvesting of crops is over, and the ashes which are left over after the stubble in the fields are burnt. Just before the onset of the monsoon, the cultivators engage themselves in converting the undulating slopes of the agricultural lands into the levelled and embanked fields, as also in repairing the dikes in the old permanent fields. With the beginning of the early showers of rainfall in March, ploughing commences in the respective fields. Ploughing is generally done with the aid of a pair of bullock—sometimes with the cows too; but not by buffaloes, for nobody owns a buffalo at present. The rice fields are ploughed at least three times, but ploughing among the Dhurwa and others (except the Maria and Lohar) is a taboo to women. Ploughing in different rice fields continues till the month of April when the sowing begins, but not before

the first ceremonial sowing ceremony (*vittil titi*) is observed in the village.

The rice seeds are normally broad-cast (*vercil vithun* or *chitwa*) in the village of Marenga from the beginning of May to the end of May. Sometimes, they broad-cast the sprouted rice seeds (*akra vercil* of *leyi*) in the month of June. Transplantation of the paddy seedlings from the nursery beds is not practised in the village, but in the adjacent villages a few cultivators are reported to transplant (*ropa*) the seedlings in June-July. In the village of our study, however, the cultivators follow "the Chhatisgarhi practice of biasi, i. e., when the rice seeds planted in the fields have sprouted, reaching to a height varying from a foot to one and a half feet, and there is adequate water in the fields, which makes the land soft and muddy, they puddle up the rice fields containing the young plants, by working over a flat wooden plank (*mawa*) on which the cultivator stands yoked to a pair of bullocks". The weeding (*kad pedung* or *ninjai*) of the injurious weeds like *Kolowa*, *Kokra*, etc., is done by the male and female Dhurwas 2-3 months (i. e., from June-July to August-September). By the middle of Dasserha (i. e., beginning of October), the paddy begins to ripen—the earliest ripening paddy is harvested without performing any ceremony in the fields, but they celebrate the first rice eating ceremony (*Kolta tiar* or *Dhan nawa*) by preparing the parched paddy (*cangul*) from the new paddy harvested from these fields. It is, however, after a month or two after the kolta tiar that the main varieties of the paddy growing in their rice fields are duly harvested from October-November to December-January. But before the harvesting operations start, the threshing floor (*kali* or *kothar*) is prepared, and the *Charu Jatra* is performed by the cultivators. The Charu Jatra is performed in any portion of the rice fields either by the cultivator himself or on his behalf by others, depending upon the nature of the tenancy held and/or the ethnic affiliations of the respective cultivators. On an analysis, it has been found that the land-holdings are cultivated by the tenants or the co-sharers, it is the respective tenure-holders who perform the Charu Jatra ceremony. But that does not mean that every tenure-holder is customarily entitled to perform this ceremony in the fields owned by him. Of course, the tenure-holders affiliated to the Neutak, Borka, Kicek, Dora, Pelace kin groups of the Marenkherias, and the Tippin Palias are specifically entitiled to perform the Charu Jatra in the respective rice fields owned by them. Even some of the long settled tenure-holders belonging to the Tiger clan have been found to perform at present this ceremony in their respective fields. But the recentil settled Dhurwa tenure-holders

and the non-Dhurwa tenure-holders of the village land are denied this privilege of performing peronally the Charu Jatra in their fields. On their behalf, it is generally the village priest (Pelac) or the respective Pujaris attached to the shrines affiliated to the Borka/Dora/Tippin Palia who perform the Charu Jatra in the rice fields owned by them.

However, after the Charu Jatra is over, the harvesting (*Koi mom*) starts from October-November till December-January, depending upon the availability of extra labour and the ripening of the particular variety of paddy. Reaping is done by both men and women among all the ethnic groups living in the village. Generally, the ears of the paddy stalks are cut by the scythe (*koi*), leaving behind the stubbles in the fields. Then the reaped paddy bunches are collected at one place and tied in bundles, which are brought by the menfolk to the threshing floor which is previously cleaned and plastered with cow-dung paste by menfolk only, for, women are not allowed among the Dhurwa to enter the precincts of the threshing floor. The harvested paddy stalks are then spread round a wooden post (*gunya*) which is about 6′ in height, when a number of cattle (4-5 in number) tied to one another in one line are driven round and round the gunya so as to separate the grain by trading (*nindai*). After the threshing operations are over, the straw is separated from the grains by hands or by means of threshing rake, and the paddy grains are gathered and made into a heap, over which charcoal powder is placed both vertically and horizontally. Afterwards the menfolk start the process of winnowing (*duti tana*), when the paddy grains are poured from a man's height from the winnowing fan against the direction of the winds with the result that the grains are separated from the chaff. Then the paddy grains are collected in a heap, and the charcoal powder is again placed at the ground level as well as in cross-wise directions, ostensibly to ward off evil eyes. Then a straw figures of a male and a female (called the *polli muttak* and *polli murtaal*) are placed above the heap of the paddy grains. It is usually on the same day that the rites called the Polli Kar Puja are performed by the respective cultivators themselves. Afterwards the paddy grains are carried by the wooden or bamboo platforms fixed in the storeroom. Of course, the seeds are sometimes kept securely in small straw rope baskets. Husking is done as and when required by the womenfolk either by means of wooden pestle inside the wooden mortars or with the husking levers (*dhenki*). A dhenki is not possessed by every family, so people make use of such husking levers as are provided in the village by 6-7 householders without, however, making any extra payment for using it.

It may now be stated that for carrying on the various economic pursuits (including the agricultural activities) the required labour is largely supplied from the respective family units found in existence in the village of our study. But during the peak agricultural season as well as for such communal work as the house construction, etc., the need for extra hands arises with the result that the labour supply is drawn from outside the immediate family circle. There are three ways in which the extra labour is procured by the respective cultivators and other in the village. In the first place, perons may be temporarily employed on the coolie-buti basis when daily payment (mostly in the form of two pailis of paddy worth fifty paise with one meal) is made after the day's work is over. It was observed that for preparing the dikes and ploughing the paddy fields, threshing and tying the paddy stalks in bundles, both the young boys and adult menfolk are engaged, while for weeding and harvesting both the old and young women are employed. These temporary labourers generally belong to such families of the Dhurwa and others of the village who either do not have any land of their own or possess insufficient land to cultivate. A few of the old widows and the young girls engaged on the coolie-buti basis were found to hail from the adjacent villages from Jaimer, Marjum, Kinderwada and Tongpal. In the second place, some of the well-to-do Dhurwa cultivators engage whole time labourers for one year or more than a year. Such labourers are called Kabadis or Kamias, and the usual mode of payment for their services is to allot them plots of land to be cultivated by them for their own use. A few of the Kabadis were working in the houses of their masters to clear off the loans which they had taken previously. For that matter, a Kabadi is required to live in the house of his master and to work in different agricultural operations as well as in other household activities of his master. It also happens that some heads of the families require the help of an adult male ; so they invite some boys or young men to stay with them and help them in their everyday life as well as on other occasions when there is a heavy demand for extra labour. Such boys or young men, unlike the Kabadis, receive annually 3-4 khandis of paddy (valued at Rs 15 to Rs 20). They, too, belong like the Kabadis to such families as have no land of their own or have large families to support, though they are generally related to the cultivators by (distant) ties of blood or marriage.

But it is on the mutual cooperative basis (locally called the *sewa-betia*) that the cultivators are tied to one another, specially, concerning the agricultural activities requiring heavy labour. Unlike the labourers employed on the coolie-buti basis or as the

Kabadis, the extra hands engaged on the sewa betia basis are neither paid in cash nor in paddy measure, but only the distilled liquor or the rice beer and the small pieces of pig or chicken or goat (*chakna*) are specially prepared by the person requisitioning their services. All the workers engaged on sewa-betia basis either bring with themselves their own cooked rice or they take their meals in their respective houses (if situated nearby), but the specially prepared rice beer (or wine) with chakna is served to them, irrespective of their age, sex, economic class or social status. It may be added that the persons who engage the extra hands on the sewa betia basis is expected to work in return for all the respective families, either in person or through some member of his family (including the Kabadi) whenever required to do so. It was observed that for undertaking agricultural activities like preparing the dikes in the paddy fields, ploughing and weeding, 10-15 persons are engaged for one day on the sewa-betia basis, but the work, connected with harvesting, threshing and taking the paddy grains at home, is stretched for a number of days, and the extra labour is engaged on coolie-buti basis. Another fact worthwhile to mention in this connection is that only among the Dhurwa and the Rawat we find the sewa-betia system prevalent, normally, among themselves, but occasionally, they enter into this sort of reciprocal relationship with one another.

It may also be mentioned that an indeterminate number of the farming population of the village supplement their earnings by engaging themselves in their spare time in manufacturing such articles as the bamboo baskets of various shapes and sizes, mats, broomsticks, cast nets, ropes of fibres, etc., both for home consumption as well as for sale in the surrounding weekly markets. It has already been pointed out that the basketry was considered the traditional occupation of the Dhurwa who were previously known as the Takra (basket) Parjas ; but at present it has become their spare time occupation seldom resorted to by their womenfolk. For that matter, the other caste groups living in the village (e. g., Rawats, etc.) have also learnt how to prepare baskets for their own use, thereby their dependence upon the Dhurwa regarding the supply of bamboo baskets has been reduced. The other employment opportunities—more seasonal than full time—open to the villagers are by working in the P. W. D. road, building and its maintenance on daily wages, varying from Re ·75 to Rs 1·25 per worker. Other types of unskilled work done in parties by the villagers are by making the repairs in the Kanji house (where the stray cattle are kept), cutting the bamboo trees in the forest coupes, and construction of the II class road from Tongpal to Lead (earning

about Rs 100 in 1957-58, and Rs 80 next year). Recently, a group of young men (consisting of 4 Dhurwas, one Rawat and one Maria Lohar) worked as the sawyers in the privately owned forest company at Kikerpal—each getting Rs 37·50 as wages for working for about two weeks. In February March, 1959, a group of 22 men was employed in loading and unloading logs of sal wood from the trucks at Tongpal, and it was estimated that each of them earned from Re 1 to Rs 1·50 per day.

Below mentioned is the amount of money which was earned by a group of Dhurwa boys and girls of the Marenga village by working in breaking stone chips and spreading moorum on the P. W. D. road near Tongpal with a view to giving an idea about extra money earned during the off season and the manner of expenditure:

1 Diri earned Rs 5 by working 8 days; she kept the whole amount with herself.

2 Bukli earned Rs 5·56, by working 10 tays; out of which she paid Rs 2·50 towards the family expenditure.

3 Genai earned Rs 12·50 by working 20 days; out of which she contributed Rs 7·50 towards the family expenditure.

4 Genova earned Rs 14 by working 20 days; out of which he contributed Rs 9 towards the family expenditure.

5 Jinki earned Rs 8 by working 12 days; out of which she paid Rs 3 towards family expenditure, and the rest she spent in purchasing one dhoti for Rs 3 for herself and dis tilled liquor worth Rs 2 for herself and her companions.

Mention may finally be made that while food is raised in the village primarily by the settled form of cultivation, fishing and hunting or trapping are the other means of procuring food. In addition, the edible fruits, roots, seeds and tubers are regularly collected from the Nistari Forests, especially by the children and womenflok for their own use and/or for sale in the market. Some of the important products gathered by them in differentt seasons are mahua, kanjil, mangoes, tamarind, tendu, seona, jamun, gora, *aonla. dumar, girli, garki, bhelwa, ber, bean pods of the seari, roots* of the kumari, kathwan, seeds of the chirginal, hirla, honey, gum, the edible pith of the chind, sulphi, etc. For fishing, they use nets and traps of various sizes. During the summer, however, women-

folk make a series of mud dams across the shallow Zairam stream, and after emptying water enclosed by each dam, they collect fish which is left behind in the mud. During the rains, the fish is caught in the rice fields by means of fish traps called *bisar* which is fixed to a small hole made through the embankments of the flooded rice fields. Usually, the children accompanying their mothers hunt fish by blunt-shaped arrows near the shrubs in the Zairam stream. Sometimes, a large number of the men and women (numbering 40-45) go in a party to fish in the nearby rivers. They first pound the bark of the oddil tree and throw the same in the river to poison the fish, and then they start picking up the stupefied fish. With regard to the hunting and trapping, it has already been stated that the ceremonial hunting (ked jatra) forms an important festival among the Dhurwa. The animals usually found in and around the village and killed by them by means of the bow and arrows are the Kodri (lamba), sambar (chirmal) and wild pigs (barha or pendu). They also kill by bow and arrows such birds as chika, tumma, thera, ader, ponal, boda, manjur, etc. It was observed that they hunt small birds on dark moonless nights by means of a bamboo torch which is held just near the groves of trees, while the birds distracted or stupefied by glare are shot by another man by means of bow and arrows—as happended on 3.12.58 at about 7 p.m. in the village of Marenga.

The Weekly Market of Leda

The weekly markets in Bastar (as also elsewhere in India) are important not only because these serve as the main channels through which the local products and the imported goods are distributed but also because these involve "a particular pattern of specialised allocation of roles to caste groups and geographical locations" (Sinha, 1961 : 134). With this introduction, let me describe the weekly market at Leda (which lies nearest to the village of my study, viz., Marenga) mainly from the sociological rather than in economic terms.

The market site in the village of Leda is situated nearly two miles to the east of Tongpal, being connected by fair weather road built in 1956-57. Tongpal lies (as already mentioned) on the main metalled road, 35 miles south of Jagadalpur. In order to reach the market village of Leda, the Marenga villagers have to cover nearly four miles after wading through the perennial stream of the Zairam or Baru. The weekly market in the Leda village

is held on every Saturday morning (8 a.m. to 11 a.m.). At a little distance away from the market site in the Leda village, there is a distillery. In addition to the Leda market, the other weekly markets are also visited, though less frequently, by the Marenga villagers, both as sellers and buyers, are as follows:

1	Puspal	6 miles from Leda			Wednesday	morning
2	Darba	13	,,	,, Tongpal	,,	,,
3	Kokanar	9	,,	,, ,,	Friday	,,
4	Kattakalyan	16	,,	,, Marenga	,,	,,

The other markets lying still far away (e. g., Paknar, Guma Kodripal, Jagdalpur and Sukma) are visited only when they happen to be there in connection with some official work or while visiting their relatives and friends.

On the basis of the visits paid by me to the Leda market on different occasions, it may be stated that the permanent market site in the village covers an open level ground, roughly measuring one acre in area, where approximately 1,000 to 1,500 persons assemble in the peak hours on the market day. Unlike the market village of Kokanar (where the rent charged per stall is twenty-five paise), no rent is levied at present in Leda village. A number of Kotwars from the surrounding villages as well as a constable or two make round in order to look after the law and order situation in the market. While some buyers continue to arrive at the market site even after 9 a.m., either singly or in long files, almost all the vendors were found to have arranged their wares on the mat or on the bare ground by about 8 a.m. The first to arrive generally are the potters, occupying the farthest (and the safest) corner in the market, while the last to leave the market village of Leda are those traders who carry their wares in the bullock carts. The vendors dealing in same products would normally sit huddled up, next to one another in rows, in front of their spread out wares. While the buyers and sellers seemed to be well-informed about the prevailing prices, it was observed that the buyers would haggle with the sellers over the price of such articles as the mill-made cotton cloth and the ready-made garments, etc., for the local products, however, the rates would remain relatively fixed over longer periods of time. The transactions for both the imported articles and the local products in the Leda market are made mainly in cash though at times the vegetables like brinjals, ginger and chillies arranged in lots, and the edible pods of the siari and red ants, wrapped in leaf covers, were found to be exchanged for salt.

In another place, one paili of salt was noted to be exchanged for one paili of paddy (equivalent to twenty-five paise). But, comparatively speaking, the cases of barter exchanges were a few in numbers.

In order to describe the relationship between castes and the kinds of commodities sold in the market, the following 20 castes, among others, were noted by us to be engaged in selling the below-mentioned commodities in the Leda market on different occasions:

Caste	Commodities sold	No. of Stalls	No. of Sellers Men	Women	Total
Bhat	Glass bangles	1	1	1	2
Bhumia	Vegetables (brinjals, etc.)	2	2	—	2
Brahmin	Potatoes, suji, biscuits, sugar, soap, chimney, etc.	1	1	1	2
Chatri or Thakur or Dhakar	Brass and aluminium wares, rice, pulses (mung), mustard seeds, salt, ready-made garments and mill-made cotton cloth, vegetables like tomatoes, brinjals, onions green chillies, sweet yams, parched rice and puffed paddy, turmeric paste and kerosine oil.	20	15	7	22
Dhurwa	Vegetables like brinjal, ginger, onions, tomatoes, chillies (dry), pumpkin, pulses (mung), edible pods of the siari, jackfruits, sweet yams, plantains, dry fish, tobacco leaves, rice, winnowing fans, tora oil, locks, pins, bidis, biscuits, scissors, etc., and a servant working for a chatri (Thakur) dealing in rice and cotton cloth.	63	27	40	67
Dhur Gond	Tora oil.	1	—	1	1
Gadawa	German silver ornaments like armlets, anklets and finger rings.	2	3	3	6
Halba	Tora oil, jaggery, beads, locks, soap, bidis, etc., and working as a servant with a Chatri dealing in ready-made garments.	4	3	1	4
Jain	Bell-metal vessels	1	1	—	1
Kallar	Tora oil, and a servant engaged by a Chatri dealing in cotton cloth.	5	1	5	6
Kumhar	Earthen vessels like the pitchers andi and dudi.	2	4	3	7
Maria Lohar	Iron implements like the scythe, knife, etc.	2	2	—	2
Mahanti	Gum, soap, bidis, mirrors, combs, etc.	1	1	—	1
Mahar	Hand-loom cloth like dhoti and anguchi, beads, glass bangles, locks, etc.	10	10	4	14

Caste	Commodities sold	No. of Stalls	No. of Sellers Men	Women	Total
Maria	Vegetables like brinjals, dry chillies, mahua, plantains, pulses, rice and ragi.	22	20	19	39
Muria	Sugar-cane and its juice, jaggery and oranges.	5	10	1	11
Panara	Jaggery, puffed rice,, plaintain and fried articles (like bajia, etc.) *roti*, vegetables and turmeric.	7	2	5	7
Panka	Multi-coloured beads and necklaces, colours, locks, mirrors, etc.	2	2	1	3
Rawat	Tea, *puri* and other fried articles (e.g., bajia), *roti* made of rice powder, curd water (mahi), small fish, beads, mirrors and other trinkets.	13	10	13	23
Telinga	Puffed paddy and parched rice	1	1	—	1
20 Castes		155	116	105	221

The enumeration of the above-mentioned 20 castes excludes those caste groups who visit the Leda market on other occasions (e. g., the Marwari, the Teli or Sahu, Christian, Sikh and Muslim pedlers). Nevertheless, it is clear from the above list that the sale (and preparation) of the following articles is exclusively restricted to particular caste groups. For example, the Gadawa manufacture and sell the German silver ornaments, the Kumhar make and sell the earthen vessels, the (Bison-horn) Maria Lohar prepare iron implements for sale and the Mahar manufacture and sell the hand-loom cloth. Over and above, these four caste groups, the winnowing fans (as also the bamboo baskets of various shapes and sizes) are made and sold by the Dhurwa, the ready-made garments are exclusively sold by the Chattris or Thakurs, and the preparation and sale of the fried articles and other eatables (including tea) are carried on specifically by the Rawat and the Panar (for it is from their hands that the cooked food is accepted normally by all). In contrast to the above-mentioned cases of the caste-wise specialization of occupations, the transaction of the following articles does not seem to be limited to the spacific caste groups: vegetables, oil seeds, pulses, cereals, tora oil, jaggery and such trinkest as mirrors, combs, bidis, etc.

It may also be noted that these (221) sellers belonging to 20 caste groups consisted of 116 males and 105 females. While for such imported articles as mill-made cloth and ready-made garments, brass and aluminium vessels, iron implements and hand-loom cloth, no woman seller was found, for such articles as vegetables and tora oil, the women sellers preponderated over the men sellers

in the Leda market. We may mention below the distance of the villages (from Leda market) from which these 221 sellers attended the weekly market:

Distance (in miles)	No. of sellers' villages
0—5	136
6—10	32
11—15	35
Above 15	7
Unknown	11
Total	221

While the above list of the sellers' villages is not exhaustive, still it shows, approximately though, the area from which the sellers attend the Leda market. Thus, more than half of the sellers belong to such surrounding villages as lie at less than 6 miles from the market village of Leda. These sellers travel on foot, carrying their wares on their shoulders and their heads, by menfolk and womenfolk, respectively. Concerning the sellers who attend the market from villages lying at more than 10 miles from the Leda market, they generally travel in bullock carts, laden with commodities for sale. These bullock carts are either owned by them or taken on hire at the rate of Rs 1·50 per day. With regard to the sellers visiting the market from 6-10 miles distant villages, while some of them attend the market on foot, others prefer to travel in bullock carts. On one occasion, we counted as many as 29 bullock carts arranged on the outskirts of the market. It may also be noted that some of the professional traders (specially the Thakurs of Kokanar) engage the services of local men (e. g., the Dhakar, Dhurwa, Halba, etc.) on daily wages to make the purchase of the local products (in small quantities) as well as to sell the imported commodities to the local people visiting the market. Quite often, these traders work more or less as the middlemen.

Apart from these professional traders, the local villagers engaged in cultivating the cash crops like tobacco, oil seeds, pulses, vegetables, etc., and sell their surplus products in the Leda and adjacent markets. Thus, Mahengu Dhurwa of Marenga village managed to sell dry tobacco leaves in 1956-57 at Rs 160; in 1957-58, its sale went upto Rs 200; and in 1958-59, the sale proceeds touched Rs 240. Similarly, brinjals worth Rs 5 were sold by him and his wife in 1957-58, while next year it fetched him Rs 10. It may be added that young children, ranging in years between 10-15 years, of the Marenga village were found to gather in different seasons of the year forest products like mahua, karanji, dumar,

gum, honey, etc., for sale in the markets. They also find time to kill birds as well as to catch fish with a view to selling the same in the weekly market. In addition, the Dhurwa of the village prepare bamboo baskets for sale in the markets. It may, however, be pointed in this connection that most of the persons engaged in selling their wares in the market of Leda also make it a point to purchase the necessary articles required by them either for their everyday life or for some future use. Thus, a Dhurwa of the Marenga village (Kuta by name) had sold dry tobacco leaves, and from the sale proceeds had purchased salt worth six paise, fried articles worth six paise, dry fish for twelve paise, fruits for six paise, and distilled liquor worth thirty-seven paise. Then there was a case of another young Dhurwa boy (Iyetu by name). He had earned nearly three khandis of paddy by working in different agricultural activities in the village. On husking paddy, he had got nearly 24 pailis of rice ; out of which 6 pailis were given by him to meet the family expenditure, while the rest he sold on different occasions in the weekly markets at a total amount of Rs 4, which was used by him in purchasing one shirt and one half-pant (for his own use), also, the jaggery, sweet jam and bobu (for his younger brother and sister). The remaining 12 pailis of rice was later on sold by him at Rs 8, which was utilised by him in purchasing (jointly with his two elder brothers) a small-sized bullock from Paknar market.

Mention may be made that the Marenga villagers sometimes go over to such distant market as Paknar, Gidam and Jagdalpur to purchase the cattle, though quite often the dealers in cattle visit the Marenga village to make direct sale with the villagers. So also the Kumhars (potters) of Kokawada and Puspal villages sell the earthenwares in the weekly markets as well as through the (Mahar) women middlemen in the villages. Similarly, the Mahar of Kodripal village sell the hand-made cotton cloth either in the Leda market or by visiting different villages. Likewise is the case with regard to the Maria Lohar of Kokanar and Guma Kodripal, and the Mangens (Gadwan) of Sautnad, Tongpal and Kokawada villages, who sell the agricultural implements and the German silver and brass ornaments, respectively.

Although the recently opened permanent shop on the road side village of Tongpal and the direct sale and purchase inside the village of Marenga serve as important channels in the circulation and distribution of commodities both local and imported, still it is the weekly market of Leda that draws together on every Saturday morning a large number of buyers and sellers, thereby the turn-

over of the commodities and money in the Leda market is much more than that accrues through other channels. Furthermore, the weekly market of Leda also provides a convenient place for meeting the friends and relatives. It is usually there that the dates and venues of important festivals and other social gatherings are arranged ; so also are matrimonial affairs sometimes fixed there. Then the distillery near the market village is an added attraction. No wonder, people living in and around the market village (including the Marenga villagers) make a point to visit the (Leda) market on the specified time and date.

CHAPTER NINE

RELIGIOUS BELIEFS AND PRACTICES

Introduction

Following the Notes and Queries on Anthropology (1960), a study of the Dhurwa religion may be made under the following broad heads:

(a) The beliefs concerning the soul in all its proliferation and the supernatural beings;

(b) The religious experts; and

(c) The rituals or ceremonies taking the forms of prayers, offerings, sacrifices, feasts, and other actions.

It may, however, be admitted at the very outset that like the Hill Saoras of the Ganjam and Koraput districts of Orissa (Elwin: 1955), the Dhurwa eschatology is not only confused but also its doctrines, vary from place to place. While the Dhurwa recognize their dependence upon the unseen powers, they possess vague conceptions regarding the nature of the supernatural beings and/or their role in the origin of the world. Since our studies are largely related to the Dhurwa of the Marenga village and its neighbouring villages, so we shall attempt in the present paper to note the main religious principles broadly agreed upon by the well-informed people of the village(s).

The Concept of Soul

In the first place, it may be mentioned that the Dhurwa normally use the term *Jivom* for that "immaterial aspect of human personality", which is called soul. It is associated by them to the breath (*nenal*) and is believed to reside near the heart. This soul substance is sometimes referred to by them as *Paran;* for instance, when somebody dies it is said that the Jivom or the Paran of the concerned person went or passed away (*cenda*). The dreams are regarded by them as the activities of the soul, for, the Jivom sometimes wanders about during the sleep but returns back as soon as one wakes from sleep and finally, depart at the time of

the death. It is also vaguely believed by them that the animals, birds and trees too possess souls with the result that all these (animate beings?) are called by them as *Jenov Jat* (or *Jiv Janto*). Further more, "just as the air cannot be seen by anyone, so the soul cannot be seen."

With regard to the fate of an individual after death, it was related by some informants that the departed soul takes its residence in the *el meri* (pipal or pikad tree) and contiunes to stay there till the death anniversary (cutak) is over. But this belief in the after-life does not imply that they specially believe in the immortality of the soul. Of course, they have a belief in the trans-migration of the souls, especially of the recently deceased elderly persons who are sometimes supposed to take their rebirths in their own families. In order to determine as to which deceased person has been reborn, a chicken is pecked from the hands of the new-born, and if the chicken accepts the rice grains offered to it, it is believed that the deceased has been reborn. Thus, it is said that the father and the mother of the village Pelac, Narsingh by name, were reborn at different times in the persons of Narsingh's two sons, respectively.

But it may be pointed out that their conception regarding the trans-migration of the souls is not "systematized enough to include the ascending series of forms, namely, the trees, birds, animals and human beings". Neither do they possess any clear and coherent idea about the rewards or punishment meted out to the Jivom after its death. All that some of them state is to the effect is that a person may be reborn as an animal or as a human being, depending on the fact as to whether he or she had led an evil or a good life. In the former case, he or she would get the birth of an animal and "be often beaten", while in the latter case, the person will be reborn as a human being who is "definitely better than an animal". Then, again, when a virtuous man dies, he is carried with honour in a cart by the Jamboots (who though resemble human beings in form belong to the special category, being invisible to the human eye), while an evil person on his death is "driven away" by them. Evidently, the fate of the soul after death is tied among the Dhurwa of Bastar with the concept of morality.

Mention may be made in this context that, according to their folk-tales, there are three worlds which are respectively known as *Upor Por* (upper world), *Manj Purne* (middle world), and *Patal* (under world). The middle world, i.e., the earth is inhabited by the human beings and other Jiv Jantus as well as the supernatural

beings, in the upper world dwells the Supreme Deity, and the Jamboots and the dead ones live in the under world. Reference will be made about the Supreme Being presently; in the meanwhile, it may be remarked that the dead ones are called "in an undifferentiated sense" the Purekel (or the Duma). The dead ones are "called" by the living ones to determine as to whether a person had died as a result of the magic or met his end by the natural death as would be seen by the flicker of light in an earthen lamp on a particular funeral rite. The Purekel or the Duma (in the sense of oneness) is also remembered by the living ones on the occasion of marriage or when the guests (particularly the affines) are entertained with the intoxicating drinks. At that time, a libation (Cuttetana or tipan) of the rice beer (landa), or the distilled liquor (melu) or the plain water mixed with the mahua flowers (irpul), is poured on the ground in its name. So also ratel (mandia or ragi) is first of all offered to the Purekel or the Duma on the occasion of the Laundel tiar (festival) before being used in the preparation of the rice beer. It was further related that an egg is offered in the name of the Purekel (or Duma) near the place where the meals are prepared on the occasion of marriage, so that the earthen vessels used for preparing the meals are not broken.

The Supernatural Beings

While the Dhurwa are not agreed as to the relative prominence of their deities, still much of the complexity of their pantheon can be removed if the supernatural beings influencing their life are classified in different categories. First and foremost may be mentioned their general belief in the Supreme Being who is commonly called Mahaprabhu, but sometimes they refer him by the term of Bagavan. He is believed to be dwelling, in a general sense, as a spirit in the sky (bador). But neither is he feared nor is he considered a malevolent being. What is more, he is not represented by any symbol in any shrine nor is he propitiated. In short, Mahaprabhu is considered too remote to come directly in the picture of their everyday life. Of course, whenever any offering is made to any deity, it is taken for granted that the same is also meant for Mahaprabhu. While some of their myths describe that Mahaprabhu is responsible for the creation of the world, human beings, and other Jiv Jantus, others mention that it is he who sends his messangers of death (Jamboots) on the death of a person, and he must be satisfied that the real person has been brought to him. However, since he is regarded as favourably disposed towards the world at large, Mahaprabhu is

said to be actuated by motives of sympathy, and one of the myths relates that he is touched by the genuine sufferings of the people and occasionally punishes the guilty ones by creating necessary circumstances.

In contrast to Mahaprabhu (Bagavan), the rest of their supernatural beings are regarded as powerful enough "to demand the personal loyalty and the correct observance of the traditional rituals". With the notable exception of a definitely malevolent being called Rau, who is persuaded with great difficulty, their deities (Vendid) are by and large regarded as their tutelary spirits, being invoked by them as and when the occasion demands; but occasionally these protective deities appear as the malevolent beings too, particularly when their displeasure is incurred as a result of the non-fulfilment of the vows (bodna). For that matter, the *maya* (i. e., the love or the blessing) from the respective deities to particular individuals cannot be ordinarily explained, if only because it all depends upon their sweet will; neither is it confined to the Dhurwa only, for a Dhakar, a Rawat or a Kallar or a Mahar have been known to be the receipient of the favour (maya) of the deities. Another characteristic feature with regard to their pantheon is that while a large number of their deities are specifically referred by them as Matas (goddesses) or Deos (gods), but still there are some whose genders are not known.

The various deities propitiated by the Dhurwa in the area of our study may be arranged both in terms of their territorial affiliations (i.e., according to the Pargana and its constituent units) as well as on the village level in terms of their kinship affiliations—as the following tabular form would show:

Sl. No.	Deity	Place (Shrine)	Symbol	Priest	Remarks
1	Danteshwari Mata	Hamirgarh village	Wooden post & unhewn stones	Dhakar Pujari of Hamirgarh village	Rituals performed for the Pargana of Hamirgarh
2	Bhandarin Mata	Tongpal village	Single horn of a wild buffalo	Dhurwa Pelac of Permaras village	Rituals performed for a cluster of villages
3	"The Old Man" (Muttak)	Marenga village	Wooden central post supporting the roof of a hut	Dhurwa Pelac of Marenga village	Rituals performed for the Marenkheria segment of the Cobra clan of the village

Sl. No.	Deity	Place (Shrine)	Symbol	Priest	Remarks
4	Hinglajin Mata	Marenga village	Wooden post, unhewn stone and carved stone-image	Dhurwa Pelac of Marenga village	Rituals offered for the Tippin Palia segment of the Cobra clan of the village
5	Ladri Mata	,,	Carved stone-image and unhewn stones	Dhurwa Pujari belonging to the Nautak Jama	Associated with the Neutak Jama of the Marenkheria segment of the Cobra clan of the village
6	Jalni Mata	,,	Unhewn stones	,,	Established hardly ten years ago by the Pujari belonging to the Marenkheria segment of the Cobra clan of.....
7	Telingin Mata	,,	,,	,,	Established 12-15 years ago by the Pujari belonging to the Neutak Jama of the Marenkheria segment of.....
8	Jalni Mata	,,	,,	Dhurwa Pujari belonging to the Kicek Jama	Associated with the Kicek Jama of the Marenkheria segment of.....
9	Dongar (Dongri) Dei	,,	..	Dhurwa Pujari belonging to the Dora Jama	Associated with the Dora Jama of the Marenkheria segment of.....
10	Dongar (Dongri) Dei	,,	Unhewn stones	Dhurwa Pujari belonging to the Borka Jama	Associated with the Borka Jama of the Marenkheria segment of.....
11	Lelle Murtaal Mata	,,	Carved stone image and unhewn stones	Dhurwa Pujari belonging to the Moriapal lineage	Associated with the lineage called the Moriapalias, which is affiliated to the Marenkheria segment of .....
12	Bairam Deo	,,	Unhewn stones	Dhurwa Pujari belonging to the Tiger clan of the village	Associated with the Tiger affiliated Dhurwas (i.e., affines) of the village
13	Dular Dei	,,	,,	,,	Established 9-10 years ago by the Pujari, belonging to the Tiger clan of the village
14	Maoli Mata	,,	,,	Dhurwa Pujari of Tongpal village	Rarely propitiated by the Marenga Dhurwas

The Shrines

While some of the above-mentioned shrines (*gudi*) are situated in the open grounds, either in the midst of the agricultural fields or inside the homestead lands of the village, others lie near the scrub jungles at the foot-hills. Again, while most of these shrines are fitted with a circular bamboo fencing with a bamboo door in the middle, a few of them are also provided with a two-sloped thatching roof. Two of the shrines (viz., Ladri Mata and Maoli Mata) are fitted with a swing (ucal) which consists of two upright wooden posts joined together by a cross-bar and provided with a wooden seat which is fitted with sharp-pointed iron nails, over which the *sirah* (medium) sits when he is "possessed" by the deity. A small stone is invariably found near the door of the fencing to represent the Duar (*Usia*) Mandia—an attendant of the concerned deity. Within the precincts of the shrine, one finds an earthen plinth is raised under the shades of such trees as the sulphi, mahua, mango, etc., and it is on that raised plinth that ordinary small stones (*shila*) and/or the wooden post (*kham*) and/or carved stone image are placed to represent the presiding deity of the shrine. There may also be other small and unhewn stones to represent the consort of the deity as well as other attendants. While some of the consorts of the presiding deities of different shrines have specific names, e.g., the respective consorts of the Hinglajin Mata and Lelle Murtaal are known by the names of Lengur Deo and Eram Raj, nothing definite is known about others. In a similar manner, the attendants of the deities propitiated by the Dhurwa in the area of our study are collectively referred to as the Karia Usi, except, as already stated, the Usia or Duar Mandia. Surrounding the stone representations of the deities, there are a number of earthen figures of horses, elephants, bulls and human beings, which are arranged in rows. These are the votive offerings made by the Dhurwa and others in fulfilment of their vows on their recovery from illness, etc. Most of these shrines, moreover, have 2-3 iron rods (nearly 18″ in length) with tapering ends, fitted with iron rings (called *tilcur*), and long iron chains (*mundra*) which are kept by the side of the stone representatives of the respective deities within the precincts of the shrines. One also finds a few ovens (caundgel) made out side the shrines where the ceremonial meals are prepared on certain specific occasions.

Mention may be made in this connection that there are a few shrines which have come into existence in the recent past (say, within the last 10-15 years). In one case, it is reported that the concerned priest, a Dhurwa belonging to the Neutak Jama of the

Marenga village, was directed in a dream to bring white-coloured small stone from his agricultural field. Accordingly, he removed it and placed it outside his house in the kitchen garden (wada), where he has made an earthen plinth under the mango and sulphi trees, covering the area by a bamboo fence. The presiding deity of this shrine is called by him Jalni Mata. Similarly, another Dhurwa affiliated to the (same) Neutak Jama of the Marenga village had brought from a distant village (Miciras by name) a brass image of an (unnamed) Mata which he wanted to keep inside the shrine of the Ladri Mata to which his own Jama is associated with. But he was not allowed to do so with the result that his brother (who was the sirah attached to the Ladri Mata) parted company and managed to establish a new shrine, acting as the sirah of this newly established shrine with his son performing the function of the priest. For sometimes the presiding deity of this new shrine was variously known as Babu Mata or Jalni Mata, but at present it is called by the sirah as the Telingin Mata. In the third case, a Dhurwa affiliated to the Tiger clan of the Marenga village, on the occasion of the Mandai fair-festival, was "possessed" by Dular Dei. On his return, he established a new shrine in the village by keeping a small stone (which is said by him to have been "self-born", i.e., found by him in accordance with the instructions given to him by the concerned deity when he was possessed) to represent the Dular Dei, of course, with the due permission of the Hinglajin Mata, who had allotted specific portion for the deity in question in the village.

The Symbols of the Deities

The above list makes it clear that the various deities (Vendid) propitiated by the Dhurwa in the area of our study are represented by symbols. A unique type of symbol is that of the horn of a wild bison (Konda) representing the Bhandarin Mata. It is said that the original symbol (*nishan*) of the deity in question was also the horn of a wild bison which was burnt in a fire that broke out 30-40 years ago, as a result of the Penda-cultivation resorted by a Dhurwa of the Marenga village (Mangru by name). Although Bhandarin Mata tried to protect it by throwing it away at a great distance, but that particular horn was damaged by the fire. Then, it was decided that Mangru should replace it, for, he was held directly responsible for this loss. The difficulty arose as to how to procure it, for the horn should belong to that particular buffalo which had been killed by a tiger. However, after some search it was found that a horn of this description was lying in the adjoining State of Orissa in a village called Balmela. So Mangru Dhurwa

along with other Dhurwa elders went in a party, carrying with themselves four bottles of the distilled liquor, as a gesture of goodwill. On reaching there, they found, much to their relief, that the village priest (pelac) was ready to part with the horn. But in order to test its genuineness, they wanted some time to arrange for hunting in its name. The hunting proved successful for a spotted deer (Cital) was killed. Thereafter, Mangru accompanied by other elders went to the Balmela village, carrying with them the following articles: five pailis of rice, one cock, four bottles of liquor, one pitcher of rice beer, one new piece of cotton cloth (to be used for covering the sacred object) and Rs 20 in cash. In the meanwhile, the Balmela villagers had found by the same method of hunting that it was the pleasure of the deity to part with the horn. Thus, amidst the general rejoicings of the people assembled on this occasion, the sacred object was ceremoniously brought over to the village of Tongpal, where it was placed on the bamboo platform built inside the two-sloped small hut. Since then, this sacred object (viz., the horn) represents the Bhandarin Mata and is regularly propitiated in public by the Dhurwa on such public ceremonies as the Seed Sowing, Hunting, New Mango Eating and Laundel.

Quite apart from this special type of the sacred object, the wooden posts (kham) are used to represent the respective deities by the Dhurwa and others living in the area under our study. These posts are made of the sagwan (teak) wood; standing almost 4′ in height, these are fixed in the two shrines of the Danteshwari and Hinglajin to represent the respective deities; both are uncarved and in decrepit condition. But the wooden post fixed in the shrine of the Muttak to represent "the Old Man", forming the central pillar to support the transverse and cross beams of the roof of a hut, is carved with geometrical designs of circles, hatching and chevrons. However, by far the largest symbols of the various deities in the area of our study consists of the rough, unhewn stone pebbles (Shila or Kel). While some of these stone symbols are white in colour, others are round in shape, and yet others have sloping ends at their tops. But whatever be the size and shape of these stone symbols, none of them is daubed with with vermilion, of course, these are embedded in earthen plinths which seldom reach to a height of 6″, being built around such trees as sulphi, mahoa, mango, tamarind, aden and bamboo grooves. It may be added in this connection that since late (say within the last 10-15 years) the anthropomorphic images carved in stones have also been arranged in a few shrines. While the one lying in the shrine of the Lelle Murtaal has been carved by a (Bison-

horn) Maria from Paknar in exchange of a bullock given by the concerned priest, the second carved image representing the Ladri Mata is reported to have been made by a mason from Kokanar who was paid for his services by a Rawat from Nangur in fulfilment of the vow in connection with the recovery of his son from his illness. To be sure, these carved stone images though representing the variously named deities are made almost in the same fashion ; thus, the female figure representing the Mata or Murtaal is uniformly shown to be in a standing position with four arms—one hand holding a knife and the other a spear, etc. ; she is also shown to be wearing a crown that is decorated with a number of necklaces and is surrounded by such animals as tiger, elephant, etc. But whether it is the wooden post or an ordinary stone pebble or a carved stone image or even a horn, these sacred objects representing the respective deities propitiated by the Dhurwa of Bastar to receive " the ceremonial treatment " only on those occasions when the rituals are actually offered to them ; for the rest they are left uncared for, even are allowed to be washed away by the heavy downpour of rainfall (as was reported to be the case in the Dular Dei shrine).

Generally speaking, the various symbols representing the deities are said by our informants to be lying in the respective shrines since a long time (excepting, of course, for the recently established ones). Thus, the wooden post (kham) representing the Danteshwari Mata in the Hamirgarh village is said to have been fixed by the grandfather (or the great grandfather) of the present Sukma Zamindar. But the rough unhewn stones representing the Hinglajin Mata and her consort are believed to have been removed in the remote past from the (at present dry) well lying near the bank of the Zairam river passing on the east of the Marenga village. Significantly enough, the male and the female ancestors of the Tippin Palia segment, who are associated with the Hinglajin Mata shrine, are also believed to have emerged from the same well. Similarly, Lelle Murtaal shrine is said to have been established in the village by the father of the present Pujari of this shrine, who had shifted from the Moriapal village—even now this particular shrine is called the Pardesin Mata. However, the Dongar Dei shrine associated with the Dora Jama of the Marenkheria segment is related to have been shifted from the Dongar Cendi foot-hills, but the other Dongar Dei shrine associated with the Borka Jama of the Marenkheria segment is still located in the foot-hills of the Dongar Cendi. With regard to the Bairam Deo shrine, it is believed that the ancestors of the present day Tiger-affiliated Dhurwas of the Marenga village had established the shrine

in the village in the long past when they settled from Pujari Para in Marenga village for good.

The Deities

With regard to the deities propitiated by the Dhurwa living in the area of our study, mention may be made, first of all, of Danteshwari Mata who is regarded uniformly as the presiding deity of the Hamirgarh Pargana which consists of 14 villages (including that of the village of Marenga). Our Dhurwa informants are aware of the legend that Danteshwari Mata, having accompanied the ancestor of the present ruling family of Bastar from Warangal, had taken her abode in Dantewara. However, a separate shrine is built for Danteshwari Mata in the (mul pargana) village of Hamirgarh, and the priest associated with her shrine is a Dhakar. The Dhakar priest, to be sure, is assisted in his various priestly functions, among others, by the Dhurwa Pelac of the same village. Regular puja is performed in the shrine of the Danteshwari Mata once a year in the month of Chaitra (March-April) on Sunday. In addition, the Pargana-wise fair-festival called the Mandai/Bazar is celebrated every year in this shrine, when the Dhurwa and others living in the villages comprised under the Pargana of Hamirgarh (as also other "invitees" from beyond the Pargana) participate. It is generally held that until the formal puja is over in the shrine of the Danteshwari Mata neither the Rice Seed Sowing Ceremony nor the Mandai/Bazar can be performed in any constituent units of the Pargana. Furthermore, the blessings of the Danteshwari Mata are sought by the Dhurwa and others living in the Hamirgarh Pargana whenever any serious illness breaks out among the men or the cattle there. Quite recently (1957-58), Danteshwari Mata shrine was visited in order to invoke her aid and guidance to test the truth of an accusation in a dispute involving a Dhurwa and a Bison-horn Maria of the Marenga village. Moreover, the holy water from this shrine is also used by the Dhurwa and others of the Pargana of Hamirgarh for the purificatory rites. All these facts show that the Danteshwari Mata is held in great reverence by all the people living in the Hamirgarh Pargana.

In the second place, mention may be made that the four neighbouring (Dhurwa) villages combine together to perform the common ceremonies and festivals in a shrine whose presiding deity is called Bhandarin Mata. These four villages forming a part of the Pargana of Hamirgarh are Tongpal, Littiras, Permaras and Marenga, and the rituals performed in common by the Dhurwa

and others living in these villages concern the Rice Seed Sowing Ceremony, Ceremonial Hunting, New Mango Eating Ceremony and the Mandai/Bazar fair-festival. The shrine of Bhandarin Mata consists of a two-sloped hut (about 5′ in height) which lies half-hidden in the thick foliages of the mango, mahua, kekad and other trees. It contains a bamboo platform (about 3′ in height) upon which is kept the horn of a wild bison to represent Bhandarin Mata. This commonly propitiated shrine situated just outside the village of Marenga lies within the confines of Tongpal village. The priest attached to this shrine is the Dhurwa Pelac of the Permaras village, who performs the rituals under the guidance of the Dhurwa Cetia or Naik of the village of Tongpal, being assisted by other Dhurwa functionaries, e.g., the Dora of Marenga, the Borka of Marenga/Tongpal and the Kicek of Littiras. It may be added that Bhandarin Mata is identified by our informants with the Mati, i.e., the Earth deity. Quite often, the libations of the intoxicating drinks poured on the ground are believed to be offered simultaneously to the Bhandarin Mata in form of the Earth deity.

The Village Deities

Thirdly, with the notable exception of Maoli Mata, all the deities propitiated at the village level seem to bear the impress of the social order found among the Dhurwa of the Marenga village, namely, the Bonsh (clan) and the Jama or Kul (kin groups). It has already been mentioned that, except 24 recently settled Dhurwa families, all the 70 Dhurwa families are believed to have settled in the village since relatively a long time ago. Out of these 70 families, while 57 families belong to the Nang (Cobra) clan, the rest of 13 families are affiliated to the Bhag or Du (Tiger) clan. Both in terms of their numbers and influence, these 57 Cobra-affiliated Dhurwa families not only dominate the village life in all walks of life, but, what is more important for our immediate purposes, the various ritualistic functions concerning the common ceremonies are distributed among themselves with the result that they hold themselves jointly responsible for initiating and organizing all the necessary ceremonies. People of this dominant section of the village regard themselves as the consanguineally related kins and hold the rest of the Dhurwa (including the Tiger-affiliated ones) as their affines (Saga). Another striking feature of their social organization is that these 57 Cobra-affiliated Dhurwa families of the Marenga village are divided into two sharply defined localized segments, called the Marenkherias and the Tippin Palias respectively. Then, again, the numerically larger Marenkheria segment is further sub-divided into (what are locally

called) the Jama or Kul, which may be termed "the kin-groups". These kin groups are known according to the specific rituals performed by them on certain occasions in the common shrines, e.g., the Pelac (priest), the Borka (cook), the Kicek (fire-kindler) and the Dora.

Significantly enough, the Cobra-affiliated Dhurwas of the Marenga village, as a whole, are not associated with a common shrine in the village instead, there are two separate shrines—each of these is being connected to the two localized segments of the Marenkherias and the Tippin Palias. The respective tutelary deities associated with the two segments of the Cobra clan of the village are called by them the Muttak (The Old Man) and the Hinglajin Mata (Ghurye, 1953). At a distance of about half a furlong from the shrine of the Bhandarin Mata, there is a shrine of " The Old Man ", which lies within the precincts of the Marenga village. This shrine consists of wooden posts supporting the side and transverse beams ; but it is the central post that is believed to represent the deity. The Marenkheria segment of the Cobra clan of the village perform the puja (rituals) once a year in that shrine on such occasions as the Rice Seed Sowing Ceremony, etc. The priest attached to that shrine belongs to the Pelac Jama of the Marenkheria segment, while the Sirah (Medium) associated with this deity belongs to the Neutak Jama of the same Marenkheria segment. It may be added that at some distance from the shrine of the Muttak, on the opposite bank of the river Zairam (Baru), there is an open space, where an earthen seat slightly raised from the level ground is marked around the tree for the Muttak, without, however, containing any symbol for the deity in question. The Marenkherias assemble on certain occasions in that alternative site of the Old Man and perform the rituals as well as prepare their ceremonial meals there. The Tippin Palia segment confined at present exclusively in the hamlet of the Tippin Pal of the Marenga village, similarly, perform the necessary rituals in a separate shrine, known as the Hinglajin Mata. It consists of a two-sloped thatched hut raised on the straight wooden posts, but remains open on all sides. Almost in the centre of the shrine, there is an old, decrepit wooden post (kham) standing for the deity, while close to the kham there are three small unhewn stones to represent the Hinglajin Mata, her consort, Lengur Deo, and the unnamed attendant(s). A small hut is also built away from the shrine, where the ceremonial meals are prepared by them on certain ceremonial occasions. The priest and the Sirah (Medium) attached to the shrine belong to the Tippin Palia segment of the village of Marenga.

But, it may be remarked that whether the rituals are performed in the shrine of the Muttak by the Marenkheria segment or in the shrine of the Hinglajin Mata by the Tippin Palia segment, in both the cases the rituals are performed by a number of the sacerdotal functionaries who are known by the particular type of the ritualistic functions performed by them in the common shrines. Thus, the Neutak is expected to arrange for the wine and the plain rice grains and keep them ready for the village priest when he returns after sowing the consecrated rice seeds in his fields ; the Dora is the first to offer the plain rice grains, egg, chicken, pig, etc., to the deity on ceremonial occasions ; the village priest, among other things, sacrifices the chicken/pig and offers the severed heads of the sacrificed animals to the deity ; the Borka is required to clean the shrine as well as to cook the ceremonial meals ; and the Kicek has to kindle the fire by means of the friction of the bamboo pieces (Kic kudrana). But while the above-mentioned sacerdotal functionaries are found among the numerically larger segment of the Marenkherias, the Neutaks are conspicuous by their absence in the Tippin Palia segment and, what is more, the functions of the Dora have been entrusted by the Tippin Palias to a Dhurwa who while living in their own hamlet is affiliated to their affinal group (viz., the Tiger clan), while previously it was reported that the functions of the Borka were performed by a non-Dhurwa (viz., a Kallar) of the village. All these anomalies are explained by the Tippin Palias as due to the "wishes" of their tutelary deity, as divided by the Sirah.

Yet another noteworthy feature worthwhile to mention is that, unlike the Tippin Palia segment, the sacerdotal functionaries belonging to the Marenkheria segment hold the office of the Pujaris (priests) of the respective shrines associated with their kin groups (Jam or Kul). Thus, the man performing the functions of a Kicek while belonging to the Kicek kin group is the Pujari of the shrine associated with his kin group, viz., the Jalni Mata ; likewise the functions of a Dora are carried out by a man belonging to the Dora kin group, who also acts as the Pujari of the shrine associated with his kin group, viz., Dongar (Dongri) Dei ; similar is the case with the man working as the Borka, who belongs to the kin group of the Borka Jama, as also works as the Pujari of the shrine associated with his kin group, viz., the Dongar (Dongri) Deo. But in so far as the functions of a Neutak are concerned, though these are performed by a man belonging to the same kin group as the Neutak, still there are three Pujaris from the Neutak Jama or Kul who are associated with three different shrines, viz., Ladri Mata, Jalni Mata and Telingin Mata. It may be pointed out that the

last two shrines have been recently established, as was mentioned earlier, with the result that it is the first shrine that is traditionally associated with the Neutak kin group. Concerning the functions of the Pelac, it may be mentioned that while he is not working as the Pujari of any shrine which is specifically associated with his own kin group, viz., the Pelac Jama or Kul, but he works as the priest (Pelac) of the Muttak which is associated with the Marenkheria segment as a whole.

Referance may be made in this context to that lineage group which has hailed from the village of Moriapal 1-2 generations back. This particular lineage group has established a shrine of its own in the village of Marenga, whose presiding deity is called by its priest by the name of Lelle Murtaal, but it is alternatively referred by the term of Pardesin Mata. The Moriapalias are regarded by both the Marenkherias and the Tippin Palia segments as their consanguines (Kutamb) possibly because they are affiliated to the Cobra clan (Shukal Nang) and not to the Cobra moiety (Burtu Nang), as is the case with a number of the lineage groups which have settle from such villages as Kinderwada, Chindawada, etc. Unlike the Moriapalias, the latter lineage groups are regarded by the dominant section of the Dhurwa population of the village as their affines (Saga) ; neither have they established any shrine of their own in the village. But that does not mean that all the affinally related kins of Marenkheria and the Tippin Palia segments of the dominant clan of the village have not established any shrine of their own in the village. For that matter, the Tiger-affiliated Dhurwas settled in the village since a long time are associated specifically with the one called the Bairam Deo shrine, while recently another shrine, known as the Dular Dei, has also been established by them in the village. The respective priests of these two shrines belong to the two lineage groups of the Tiger-affiliated Dhurwas of the Marenga village, who are regarded by the Cobra-affiliated Dhurwas of the village as their Sagas (affines).

Other Supernatural Beings

In addition to the above-mentioned deities propitiated by the Dhurwas living in the area of our study, there is the spirit of rain water and/or river water which is called by them sometimes as *Cingraj* and at other times referred as (*Jal*) *Kamini*. This deity (Vendid) is invoked by them on the occasion of communal fishing for a good catch of fish as well as for sufficient rainfall for the good harvest of their crops. But it is neither represented by any

symbol nor has any shrine been built for it, indeed, our informants are not sure whether it is a male or a female deity.

All the above-mentioned supernatural beings are regarded by our informants to be their protective deities (Vendid) requiring regular propitiations. But there is one spirit, called Rau which is very much dreaded by them. Neither is its corporal form known nor is it represented by any symbol. Furthermore, its sex remains unknown, its movements are regarded as uncertain and its behaviour is believed to be capricious. However, it is generally believed that Rau marks its victims—be they human beings or the cattle—by shooting small stone or clay pieces, which remain invisible to the human eye. These shots cause a great deal of pain (like the pricks of a needle) usually at the back of the patients, and more often than not such patients as are marked out by this malevolent being succumb to death. Thus, it was divined by a Sirah that the wife of the village priest was suffering from the excruciating pain at the back, because of the actions of the unpredictable Rau. So a Bison-horn Maria medicine-man of the village was called on 17.2.58. After repeating some incantations, he rubbed the affected portions of the patient and then started sucking with his mouth. After a while, it was given out that he had managed to extract the small pieces of stones which were believed to have been thrown by the eccentric Rau, with the result that the patient was reported to be showing signs of recovery soon after. But in another case, no amount of manipulative treatment resorted on more than one occasion by more than one medicine-man to extract these mysterious objects from the body of the patient, neither the propitiations to the different tutelary deities, as prescribed by the mediums, could save Bhan Singh Rawat from his doom. The result was that after being attacked by Rau on 21.3.58, while engaged in making the repairs of the road (as reported by the patient himself), Bhan Singh died within a fortnight.

Salient Features of the Deities in General

It may be stated, in the first place, that some, if not all, of the above-mentioned deities are believed by our informants to be related to one another either by blood (i. e., consanguines) or by marriage ((i. e., affines). Thus, Ladri Mata, Jalni Mata (proper) and Hinglajin Mata which are associated respectively with the Neutak and the Kicek kin groups of the Marenkheria segment, and the Tippin Palia segment as well—both these segments being affiliated to the dominant Cobra clan of the village of Marenga—are believed to be related to one another as the sisters, while Bhan-

darin Mata who is propitiated collectively by both the segments (along with the four neighbouring Dhurwa villages) is regarded as their mother, being commonly indentified with the Earth (Mati) deity. Likewise, the deities associated with the Tiger-affiliated Dhurwas of the Marenga village, namely, Bairam Deo and Dular Deo and Dular Dei, related to each other as consanguines, are regarded as the affines of the above-mentioned Matas. For the rest, our informants are not at all clear about the relationship of other deities. In the second place, while the deities associated with the Dora and the Borka kin groups of the Marenkheria segment are considered to be the mountain spirits (as their names imply), but neither their specific names nor their sex is known to our informants. Thirdly, it may be mentioned that, according to some informants, the deity associated with the Marenkheria segment, as a whole, namely, the Muttak, is the old man (muttak) of Bhandarin Mata, but others would hold that the Muttak is none other than the Earth deity itself. In case, the former view is accepted then the Muttak would be regarded by both the Marenkheria and the Tippin Palia segment of the Cobra clan of the village as their affine which is far from correct. So, then, the second possibility remains, and thus it may be said that Muttak is basically the Earth deity which is locally called the Mati, and is regularly propitiated by all the people living in this area of our study. This masculine form of the Mati deity is sometimes referred by a few of our informants as the Gram Devata (deity) as well. However, when the rituals are offered in common by a cluster of four neighbouring Dhurwa villages in the Bhandarin shrine, then it appears that the Bhandarin Mata, who is also regarded as the Mati, is propitiated purely in female form ; but when this Earth (Mati) deity is propitiated at the village level, it takes the form of the (unnamed) Old Man (Muttak). But it is rather difficult to say as to how far the different deities associated with different kin-groups (Jam or Kul) may be regarded as the different forms of the same Earth deity, for the priests attached to these deities are known as the Pujaris, and not the Pelac. A Pelac, unlike a Pujari, is required to officiate as the priest of the Mati (Earth) deity, which appears to take the recognized forms of the Bhandarin Mata and the Muttak. Grigson (1938 : 206) while describing the religion of the Bison-horn Maria has also noted that "there are several forms of the village Mother, or at least of the Earth ; and though all are fundamentally the same, they tend gradually to be vaguely differentiated in the minds of the villagers, and soon, no doubts, will be individual godlings, each with its own functions".

Then, again, while most, if not all of the above-mentioned deities propitiated by the Dhurwa in the area of our study are

definitely Mother deities (Mata or Murtaal), still neither do they possess sharply defined individualities not are they assinged specific attributes. However, it is generally believed by them that they are ultimately responsible for the spread and control of such diseases as the small pox (*godna*), measles etc.; but none of them is specifically assigned the power over a particular disease. The result is that when somebody suffers from fever (*tappan*), a medium is consulted and on his divining the cause of fever, the tutelary deity associated with his kin groups is normally invoked ; but if there is no relief and further if so prescribed by the medium, then another deity (preferably a Mata) is duly propitiated, and votive offerings are made to it on recovery ; but it may be pointed out that such a course does not imply that one's own tutelary deity is repudiated. In this connection, mention may be made that the non-Dhurwas settled in the village of Marenga (e. g., the Rawat, the Mahar, etc.) having no shrine of their own in the village, propitiate through the Dhurwa priests the village deities—the emotions accompanying the propitiations being those of awe and reverence similar to those felt by the Dhurwa.

It has been mentioned above that some of the deities are believed to have followed the particular lineage (or clan) groups from outside the village of Marenga, either in the long past or in the living memory, and one of them has come into existence as a result of the revelation made in a dream. Thus, on excluding such deities, as also the one which is propitiated by Tongpalias, we find that the following deities are traditionally propitiated by the Dhurwa of the Marenga village :

1 Danteshwari Mata for the Pargana as a whole ;

2 Bhandarin Mata for the four neighbouring villages ;

3 The Muttak for the Marenkheria segment of the Cobra clan ;

4 Hinglajin Mata for the Tippin Palia segment of the Cobra clan ;

5 Ladri Mata for the Neutak Jama of the Marenkheria segment ;

6 Jalni Mata for the Kicek Jama of the Marenkheria segment ;

7 Two hill spirits each for the Dora and Borka of the Marenkheria segment.

It may be added that there are many deities (Vendid) bearing the same or different names which are propitiated by the Dhurwa living in other villages in the area of our study. For instance,

Bhandarin Mata and Sonadei Mata (Marjum), Jalni Mata and Chindiria Mata (Kinderwada), Bhandarin Mata and Boheria Mata (Tahakwada), Lohjar Mata (Kakalgar and Leda), Kankalin and Jalni Mata (Kokanar), Maoli Mata (Chindawada), Kodgodin Mata (Hamirgarh), etc. While it is stated by our informants that these supernatural beings cannot ordinarily be seen by human eyes, if only because "they are like the air", still a few of them claim to have had visions of their respective tutelary deities (of course in dreams) on more than one occasion. One of them is the Sirah (medium) of the Marenga village, who is attached to the Hinglajin Mata. According to him, the said deity though looking like a human being is neither young nor old ; she has brown complexion and black hairs ; she is dressed in sari (dhoti) which is worn like a Hindu woman ; she is wearing those ornaments which are usually used by Hindu women ; she is generally surrounded by black-faced attendants (like the Karia Use). The medium saw her standing near the door of the shrine marked for her in the village and after bowing his head in her direction went away awe-struck. The other informant is a literate Dhurwa, having served as the Revenue Inspector in Bastar (state), and his name is Shri Sita Ram. As per his version, the tutelary deity associated with his kin-groups, called Lohjar Mata, though old in years looks young ; she is white in colour with white silvery hair on her head, and a *tilak* mark on her forehead ; she is wearing silver ornaments and was dressed in a white sari, like a Hindu woman, being decorated by a crown on her head.

The above description makes it clear that the Dhurwa regard their deities more or less in the image of the Hindus. But though some of them are aware of a number of Hindu gods and goddesses (e. g., Mahadev, Parvati, Ram, Krishna, Lakhmi), still none of them has been adopted by them for regular propitiation. In this connection, it may be pointed out that the Dhurwa do not propitiate their clan totems, too, although these are generally regarded by them as their ancestors (Dadi-purkha). The only case that came to our observation with regard to the propitiation of the clan totem, was that of Shri Sita Ram Dhurwa of Leda village. He had in his possession two images of the Cobra (that is, the clan totem to which he is affiliated) : while the male cobra with a raised hood and prominent eye-balls was made of silver, the female cobra smaller in size was made of brass. It was told by him that he kept them in a bamboo basket and would bring them out once a year on the day of Janam Ashtami for worship. After cleaning them with water, he would place them on the *bel* leaves and then

keep plain rice grains on the raised hoods and place an egg in front of them as also milk in two separate leaf-cups.

Religious Experts

In so far as their relationship with the supernatural world is concerned, the Dhurwa of Bastar depend upon such intermediaries as the priests, mediums and medicine-men. To be sure, these religious experts are invariably the menfolk; and since they participate, like others, in all the productive activities of the village, so it is difficult to term them as whole time specialists.

The office of the priest, while requiring no specialized knowledge or skill, is hereditary in nature, normally passing from father to son, but sometimes a brother or brother's son may succeed a brother or a father's brother. Except the shrine of Danteshwari Mata, all the above-mentioned shrines have the Dhurwa priests. Even in the case of the shrine of Danteshwari Mata, the Dhakar priest is assisted by a Dhurwa. It was reported that in the Dhurwa tract of Bastar some of the shrines which are having at present non-Dhurwa priests, were previously attended to by the Dhurwa priests exclusively. However, the Dhurwa living in the area of our study recognize two types of priests, viz., the Pelac and the Pujari. A Pelac acts for the village as a whole or a segment of a (revenue) village or a cluster of villages (forming a Pargana or one of its constituent units). He also performs the rituals (called puja) in one of the shrines linked to the Earth (Mati) deity, regularly once a year, in connection with Rice Seed Sowing Ceremony, Hunting and New Mango Eating Ceremonies. The rituals performed by the Pujari on the contrary, are called Ceva. The Pujari performs the Ceva in the respective shrines associated with their own kin groups. The Ceva is also regularly performed every year but only after the formal puja is performed by the Pelac. Of course, over and above, these formal rituals, the Pelac or the Pujari performs puja or ceva on such occasions as when a serious and sudden illness or other misfortune breaks out in the village, affecting the village as a whole or a particular person. Thus all these Dhurwa priests in the area of our study who are attached to the shrines marked 2 and 3 in the above list are called the Pelac, while those attached to the rest of the shrines are referred to as the Pujaris.

A medium is one who is "possessed" by the specific deity associated to his clan or kin group, and is commonly known in this part of Bastar as the Sirah. Not only the Sirah belongs to

the same consanguineal group (i.e., to the clan or the kin group) to which the priest is affiliated, but, what seems equally important, he alone is initiated who shows early signs of acting as the medium or the mouth-piece of the concerned deity. While some Sirahs reported that they have been instructed in dreams by the concerned deities, others have stated that they have been directly taught by father or other (male) relatives. However, as soon as the deity takes possession of the Sirah, he starts making rhythmic movements of head and body. His actions and words are believed to be directed by the deity with the result that the answers given by a Sirah are taken as literally true and correct. A Sirah who is possessed by a deity is expected not only to divine the causes of diseases and other misfortunes, but also to suggest cures of diseases as well as to direct other remedies, for instance, the sacrifices are to be offered to appease the deity. It may be added that though a Sirah enjoys among the Dhurwa living in the area of our study a high social status (even a medium belonging to the "lower" caste group, such as Mahar or Ghasia, is held in great respect during the time that he remains under possession) ; but his calling is not a profitable one, if only because he charges rather a nominal charge for the services performed by him.

A Guneya is essentially a medicine-man who is expected to diagnose the disease either by himself by feeling the pulse (*nadi tadna*) of the patient or he may seek the help of Sirah who divines for him. Like a Sirah, he may be directly instructed by a male member or he may be taught through dreams. It has been noted by us that there is hardly any Guneya worth the name who does not combine his calling with that of Pujari or a Sirah. If it is found that the patient is suffering from ordinary fever and/or pain, the Guneya prescribes some medicinal herbs and roots ; but if the illness takes a serious turn, especially if the patient shows symptoms of suffering from small-pox or such other diseases, then the treatment consists of a combination of practical therapy and propitiation (ceva) of the tutelary deity or (if so prescribed by the Sirah) of the offended deity. If, however, the patient complaints of the severe pain at the back, then the eccentric action of Rau is held to be responsible for the particular type of illness, and the cures suggested include the administration of the healing herbs and the manipulative treatment of the affected portion of the body plus the regular propitiation of the deity, as suggested by the Sirah. But if the illness lingers, resulting in wasting of the body as well as in the suffocation of the breath during and after the sleep, then the ailment is regarded as due to the magical practices (pangana) directed towards the patient. In such cases,

while the Guneya continues to cure the disease and its various symptoms with medicinal herbs, he may make use of the magical means of protection or arrange through a well-known magician to ward off the injurious effects of the magic. However, as a supernatural source of injury, the Dhurwa of the Marenga village appear to relegate the witch-craft to a minor role, though if once the witch-craft is suspected, open breaches may result, giving rise to factions which may sometimes force an entire lineage group to settle elsewhere, as was reported to be the case recently when almost all the families affiliated to the Borka Jama living in Tippin Para shifted to another area of the village. In any case, even those medicine-men who are supposed to be practising magic, also, invoke the deities, if that is suggested by the Sirah.

Now a few typical cases may be cited to illustrate to manner in which the diseases are cured in the area of our study. Julpu Dhurwa of the Marenga village, affiliated to the Tortoise clan, was suffering from small-pox, and on consulting the Sirah it was decided that he should be shifted to the care of the Guneya-cum-Pujari attached to the recently established Jalni Mata shrine, Kuta Dhurwa of the Marenga village by name, who belongs to the Neutak Jama of the dominant Cobra clan of the village. Accordingly, Julpu was shifted from his house on 6.2.58 and stayed for about a week (i.e., till his recovery) in the temporary hut built near the house of the Pujari Kuta. The treatment consisted of the medicinal herbs administered to the patient as well as the regular propitiation of the concerned deity by Kuta Pujari. Julpu promised to offer the votive offerings (bodna) in the shrine of Jalni Mata in case of his recovery ; but no payment in cash or kind was made by the patient to Kuta, for (as Kuta would put it) he considered it as his "dharma" to propitiate the Mata on behalf of the patient, as also, to prescribe the healing herbs for his recovery from illness. Of course, it was left to the members of Julpu's family (especially his wife, Dogi) to administer the prescribed medicines to the patient as well as to nurse him and look after his needs.

The other case concerns the Guneya-cum-Pujari attached to the Lelle Murtaal shrine of the Marenga village, named Sheradu Dhurwa who is affiliated to the Moriapal lineage of the Cobra clan of the village. It so happened that one-year old son of Ganga Dhurwa affiliated to the Tippin Palia segment of the Cobra clan of the village, was suffering from high fever and was vomiting all that he was taking. The result was that the tutelary deity associated with the Tippin Palia segment (namely, Hingla-

jin Mata) was propitiated by the Sirah (or the Pujari ?) attached to the shrine. But as the condition of the child became worse, so the Sirah was consulted, and it was suggested by him that in addition to Hinglajin Mata, Lelle Murtaal should also be propitiated. Accordingly, Ganga approached Sheradu on 27.3.58 and requested him to propitiate the deity on behalf of his ailing son. It so happened that Sheradu was also requested to propitiate the deity on behalf of another patient, viz., the young wife of Mongla (Devali) affiliated to the Tiger clan of the village, as advised by the Sirah. Thus, it was for both the patients that regular propitiations (ceva) of the deity were made on next day in the morning by Sheradu Pujari. But while the infant boy of Ganga was brought in person to receive the blessings (*prasad*) from the Mata, in the case of Devali it was her father-in-law who participated in the rituals and carried the prasad to his daughter-in-law, who was lying ill in the house. Of course both these patients were given some healing medicines by Sheradu in addition to the regular propitiation of the deity. Unfortunately, Ganga's boy died after a few days, but Devali improved after about two weeks.

The third case is provided by Sahadev Dhurwa, the Sirah attached to the recently established Dular Dei shrine. In 1957-58, he was approached by a Raj Gond of Permaras village to help him to locate his lost cattle. The Raj Gond had first approached Mahengu Dhurwa, the Cirah attached to the Hinglajin Mata, but his divination had proved wrong. However, thanks to the consultation with Sahadav, the Raj Gond was able to locate his missing cows in the Ludkiras village. Soon after recovering the lost cattle, the Raj Gond fulfilled his vow by making payment of Re 1 in cash to Sahadev as well as by offering one cocoanut to the deity. In a similar manner, a Dhurwa from Tondrapal village had lost his bullocks which were used by him in harnessing his cart. He had at first consulted a Sirah of Kawrakoppa village, but his divination did not help him to locate his missing bullocks. Then, on the suggestion of the above-mentioned Raj Gond, he consulted Sahadev who helped him to locate the stray bullock correctly. But the vow promised by the Dhurwa (namely to offer a goat or pig to the deity) had not been fulfilled. Then again, Sahadev helped his six-year's old mother's sister's son living in Leda village to recover from high fever (*tapan*) and cold (*jada*) within a week. This boy related to him as his "brother" lived with Sahadev during his illness and was properly administered the healing medicines and food (free of

cost), in addition, the concerned deity was regularly propitiated by him on his behalf.

RITUALS (GENERAL)

Those participating in the ritualistic activities include not only the sacerdotal functionaries like the Pelac, the Neutak, the Borka and the Kicek, but also almost all the male heads of (or, for that matter, the male adults belonging to) the families settled in the village. In other words, the participation in the rituals among the Dhurwa and others living in the area of our study depends on such considerations as the age (adults) and sex (males) ; thus the women and the small children are excluded from attending the ritualistic activities. These ritualistic activities are performed once a year on a Sunday, in common, by neighbouring four villages, as a whole, and subsequently by the two segments of the Marenkherias and the Tippin Palias separately at the village level on Wednesday and Thursday, respectively, also once a year ; and thereafter by the various kin groups comprised within the numerically larger Marenkheria segment in the different shrines associated with their particular kin grops annually on Tuesday. Over and above these public ceremonies, the rituals are also performed for personal reasons in order to obtain the aid and guidance from the supernatural beings propitiated by them, e.g., the cure of illness, recovery of stray cattle, etc. But whether the ceremonies are publicly held or are privately arranged, not only the reading of the omens is known to all but also the language used is understood by all. A brief description of the annual ceremonies and festivals will be given later on ; in the meantime, we may note that the prayers are offered in all their rituals by the concerned priests. But it was observed that the prayers addressed to their supernatural beings in the public ceremonies do not appear to occupy a very important place in the performance of their rituals, as it is assumed by them (vaguely though) that by performing the rituals in the traditional manner the desired results would be obtained. Below mentioned are some of the freely translated prayers which are addressed by the Pelac on specific public occasions, and naturally the substance of their prayers varies according to the ceremonies :

(*A*) *Prayers addressed to the Earth* (*Mati*) :

(1) On sowing the consecrated Rice Seeds :

"May the seeds enter into the fields and stay there ; and may all the stones be washed away ! "

(2) On the occasion of the Ceremonial Hunting:

"May the snakes, tigers and the panthers not remain lurking around the corners!"

(3) On the occasion of the harvesting of rice fields:

"Oh, Mother Earth! May the rice grains be so much that for each rice seed sown in the fields, a very large number of rice grains sprout, and so it may be possible for us to harvest plenty of crops!"

(*B*) *To Kamini*:

(1) On the occasion of the communal fishing:
"May a large number of fish be caught by us!"

(2) On other occasion:

"May there be sufficient rainfall so that we have plenty of fruits and food-grains!"

With regard to the rituals which are performed by an individual for personal reasons, whether after consulting a Sirah (e.g., to discover the source and cure of ailments and misfortunes) or through the agency of the Pujari (e.g., to offer the sacrifice on behalf of the ailing person or to invoke the supernatural aid in curing the illness), the prayers addressed to the concerned deity consist of description of the events giving rise to the occasion and the detailed supplications, often interspersed with such honorifies as the Matari, Iya, i.e., O Mother! The object behind such prayers is, as opposed to the prayers addressed in public ceremonies, to win the favour of the deity in question. Thus, in the previous case, Sheradu priest while invoking Lelle Murtaal deity stated that the ailing son of Ganga and the wife of Mongla had taken shelter under the care and protection of the deity, and he humbly prayed on their behalf that the respective patients might recover soon through her kindness. Sometimes, guidance from the supernatural beings is also sought by the priest by means of an oracle which runs to the effect that if one rice particle placed on the stone image of the deity falls, then the patient is expected to recover soon; but if two rice particles fall then there would be no possibility of recovery, and if the whole lot falls then it is sure to take time for the patient to recover. Apart from those rituals which are performed purely for personal reasons, there are certain occasions when the respective tutelary deities are to be propitiated by the concerned priests. During such ceremonies, the prayers addressed by the

respective Pujaris run to the effect that the village may be protected from all sorts of diseases and to save the people living in the village "by not closing the eye". In other words, such a prayer is general in tone and substance.

Concerning the sacrifices and offerings, it may be stated that there is hardly any ritualistic activity where these do not constitute an important part. While the animals offered as the sacrifices usually consist of chicken, pigs and goats, the other articles invariably offered are eggs, uncooked rice grains, and the libations of the intoxicating drinks like the mahua, liquor, but sometimes cocoanuts, areca-nuts, turmeric powder, egg shells and libations of the rice beer are also offered in different rituals. According to the version of our informants, the animals are sacrificed and the articles are offered primarily to show respect (man) to the respective supernatural beings recognized by the Dhurwa in the area of our study. However, before any sacrifice is made, the chicken and/or the pigs are first sprinkled with water, and then a few uncooked rice grains are offered to them to peck and eat, and when the animals actually take them, then it is believed that the concerned deity is willing enough to accept the animals. It is always the priest (i.e., the Pelac or the Pujari) who severes the head of the sacrificed animal and the severed head is placed by him on the altar of the deity, while the body is thrown aside. Another significant feature to mention in this connection is that the blood flowing out of the beheaded chicken or the pig is carefully mixed with the uncooked rice grains inside a leaf-cup. The rice mixed with the blood of the sacrificed animals (*netri perkul*) is cooked separately and may be eaten by all those who are consanguineally related kins; but the heads of the chicken, which are separately cooked, are only to be eaten by the Pelac. On the other hand, where the deities are propitiated by the Pujaris, the uncooked rice grains are mixed in milk (gau-ras). The rice mixed with milk is then placed on the top of the stone or other representations of the deities, and, later on, this milk-rice is distributed among the participants as a *prasad*. The other interesting feature worthwhile to mention is that the votive offerings consisting of the earthen figures of human beings, elephants, bulls and horses are kept inside the shrine in fulfilment of vows (bodna) ; but, curiously enough, no such votive offerings have been observed in the shrines marked for the Bhandarin Mata or the Muttak or the mountain spirits. Then, again, while the rituals are performed once a year in all the shrines in the month of Chaitra (March-April) on the days fixed in advance, it is only in the Bairam Gudi (shrine) that rituals are performed

once in three years, when a white-coloured goat and a cock are required to be sacrificed. It may be added that black-coloured chicken are said to be offered for sacrifice to the Karia Use, while for the rest there seems to be no hard and fast rule regarding the mode of sacrifice or the colour of the animals offered for sacrifice to various supernatural beings on publicly held or privately arranged occasions.

Religious Ceremonies

Before describing the various public ceremonies which are regularly held in course of the year, we may mention that the ritualistic activities are also performed purely for personal reasons, as happened on 28.3.58 in the village of Marenga, when Sheradu Dhurwa, the Pujari attached to the Lelle Murtaal shrine, agreed to invoke the blessings of the concerned deity (Mata) to cure the ailing son of Ganga Dhurwa and Mongla Dhurwa's wife. It was at about 10 a.m. that the Pujari returned to the shrine after having taken his bath. In the meanwhile, the necessary preparations for the performance of the rituals were completed by the persons attending the patients, namely, Ganga and Mongla's father, Mahengu. These preparations included (a) the smearing of the precincts of the shrine with cow-dung paste, (b) fixing the mango leaves on the doors of the shrine, (c) cleaning by means of earth and water the brass bells (Ganti or Tingu), brass *arthi* (incense-burner fitted with a handle and a stand) and the brass thali, (d) kindling the small logs of weed, (e) lighting the clay lamp (Dia) containing the tora oil and a wick made of a torn piece of cloth and (f) keeping ready the two leaf-cups, each containing Pao of rice brought respectively by the persons attending the patients; one aluminium cup containing milk procured free of charge from a Rawat of the village was also brought, so was water kept in a gourd vessel.

As soon as the priest had entered inside the shrine, he cleaned the rice in the two leaf-cups with water and then mixed the whole lot in the milk, keeping the same in the thali. Thereafter he washed his hands, feet and mouth with plain water, and then he placed the hot embers inside the arthi and put the gum of the Serai tree on it, with the result that the incense (*dhup*) began to burn. After keeping the lighted earthen lamp and the incense burner on the raised portion of the altar, the Pujari took in both his hands the thali containing the rice mixed with milk. Then he remained in a standing position, facing the stone image of the deity, and after looking in all the four directions, he placed by his

right hand the milk rice on the top of the stone images (both unhewn and cared) of Lelle Murtaal and afterwards on all the votive offerings of the earthen figures of horses, etc., as well as near the door for the Duar Mandia, too. Then, he held in his left hand the brass bell (ganti) and in the right hand the incense-burner (arthi), and while he was striking the ganti from his left hand, he went on waiving the arthi from his right hand in front of the stone image of the deity both in the anti-clock and clock-wise directions. After completing this ritual, he put both these articles and with folded hands he prayed for the blessings of the deity to cure the patients who had been placed under her protection. Thereafter, the Pujari waited for the omens (which have already been described), and then the priest and the attendants bowed down on the ground. Afterwards the whole lot of the rice particles placed previously on the top of the stone image was removed by him to be used as prasad. While the ailing boy (who had all along been held by his father) was given the milk along with a rice particle from the prasad, a small portion was taken by Mahengu for his son's wife who was lying ill at home, and a few rice particles from the prasad was distributed among the assembled ones.

Concerning the ceremonies held in public, it has already been mentioned that it was customary in the area of our study to performed the necessary rituals first of all in the shrine of the Danteshwari Mata for the Pargana as a whole, and then in the Bhandarin Mata shrine by the four neighbouring villages in common, and lastly at the village level. But the present position seems to be that the rituals continue to be performed only in connection with the Mandai/Bazar fair-festival in the shrine of the Danteshwari Mata for the Pargana of Hamirgarh as a whole (subsquently followed by respective villages), while the four villages, Marenga, Tongpal, Littiras and Permars, combine together to perform the rituals in connection with the annual Ceremonial Hunting (Ked Candean) and other ceremonies. And it is generally at the village level that the New Mango Eating and the Rice Seed Sowing Ceremonies are performed in the two separate shrines of the Muttak and Hinglajin Mata by the Marenkheria and Tippin Palia segments affiliated to the dominant Cobra clan of the village. Thus it was on 30.3.58 (Sunday) that the necessary rituals in connection with the annual Hunting Ceremony were collectively performed by the aforesaid village in the common shrine of Bhandarin Mata, under the supervision of the Pelac of Tongpal, who also acts as the Naik (Cetia) of the Dhurwa living in the village of Marenga, Littiras, Tongpal, Permaras, Leda, and

Tahakwada. Each of the participant had come with one suli ($\frac{1}{4}$th seer) of rice, while a chicken and a pig worth Rs 1·37 were purchased by subscription.

The actual ceremony started at about 2 p.m., when as many as 43 elderly males, (consisting of 41 Dhurwas and 2 Kallars from the four villages) had assembled near the shrine of Bhandarin Mata. While the whole open space in front of the shrine had been cleaned long before the actual ceremony started, it was only a portion of it that was besmeared with cow-dung paste, where a deer skin was spread on the bare ground. Then, the horn of the buffalo, representing the Bhandarin Mata, was brought from within the shrine by the Pelac (priest) of the village of Permaras (Pelac-rac), and after cleaning it with plain water, he applied the turmeric powder on this sacred object. Afterfards, this horn was placed reverently by him on the deer skin ; a sacrifical knife was also kept near this sacred object on the deer skin. Then plain rice grains were kept in a leaf-cup by the pelac in front of the sacred horn. Later on, the chicken and the pig were handed over by Dora of Marenga to the priest who first offered the plain rice to these animals and then beheaded them with the sacrificial knife. While the blood flowing out from these beheaded animals was held in the leaf-cup containing the rice, the heads of these animals were kept in front of the sacred horn on the dear skin—the bodies of the chicken and pig were taken by others for skinning and cutting into pieces. Then seven lots of rice were made in front of the sacred horn on the bare ground, and turmeric powder was placed upon them. During the time these rituals were being performed by the priest (Pelac of Permar-ras), the Kicek of Marenga/Littiras kindled the fire by means of the friction of the bamboo, and then the Borka of Marenga/Tongpal started cooking the rice and the meat of the pig as well as the chicken in separate earthen pots on the stone-ovens for all the participants, excepting the two Kallars who prepared their own rice and the meat of the sacrificed chicken on a separate oven. The respective heads of the animals offered in sacrifice were also separately cooked by the Borka for the exclusive use of the three Pelac (Kul) of the Permaras, Tongpal and Tongpal villages. The ceremony came to an end by 5 p.m., after the participants had eaten their ceremonial meals.

From the next day the people living in the aforesaid villages assemble in the morning near the Bhanadarin Mata shrine to go out for their ceremonial hunting ; but it is on the next Wednesday and Thursday that the Tippin Palia segment (consisting of nine family-heads) and the Marenkheria segment belonging to the

dominant Cobra clan of the village of Marenga, respectively, perform the necessary rituals concerning the Rice Seed Sowing Ceremony in their respective shrines, viz., Hinglajin Mata and the Muttak. The Dhurwa belonging to these two respective segments assemble in front of their respective shrines on these days and perform through their respective priests (Pelac) the rituals concerning the Rice Seeds Sowing Ceremony (Vitil Titti). On the occasion, the participants carry with themselves in addition to one suli of plain rice, one chicken and a small packet containing the rice seeds to be sown in their respective fields. The Pelac sacrifices the chicken, offering the heads to the deity, and sprinkle the blood on the respective rice seed packet brought by the people. Later on, the meat of the chicken as well as the rice is cooked by the Borka, and eaten by all the assembled ones ; but the heads of the chicken are eaten only by the consanguineally related kins and not by the affines (Saga). Next day, in the early hours of the morning, the Pelac gets up and goes over to his field, where he sows (rather broad-cast) the consecrated rice seeds. On his return, the Neutak serves him with distilled liquor, while the Borka prepares the cooked rice and the chicken. In the afternoon, the Dhurwa ceremonially offer the sliced mango (medi) to the deity, again, through their respective Pelac. And, thereafter, the people living in the Marenga village are not only free to eat their mangoes but also regularly go out for hunting.

While the people continue to show their consecrated rice seeds (which is mixed with their main rice seeds) in their rice fields for a number of days (i. e., after the Pelac returns from sowing his consecrated rice seeds), the hunting continues for about two months (i. e., July-August) when the blowing of the horn (kodu undran) is stopped. Generally, the sowing is done in the morning hours, while the hunting is done in the afternoon. The hunting party (not exceeding 10-12 members) mainly consists of the Dhurwa, but sometimes may include the Rawat and the Bison-horn Maria living in the village ; nonetheless, the Mahar and the Bison-horn Maria Lohar are excluded on the ground that they are living under the shade of trees and have no idea of climbing the hills. They hunt by means of bows and arrows in the surrounding hills but occasionally they go out to distant villages like Chindawada, Darba, Mundval, etc., returning after two to three days. In case, they are successful in killing a wild boar or a deer, then they distribute equally the kill among all the participants, but the head and the feet of the kill are first prepared in soup and taken collectively before they enter inside the village.

It may be added that the Dhurwa of Bastar recognise certain taboos in so far as the sowing of the consecrated rice seeds are concerned. First of all, no sowing is done by any female, and secondly, right from the day when the rituals are performed by the Pelac of Permaras village on Sunday in the Bhandarin Mata till the time when all the persons have sown their consecrated seeds (a matter of nearly one month), neither can any marriage party pass through these villages, nor can anybody plough his fields in these villages, and none can fix the central post of his house in any of these four neighbouring villages. If any person is reported to have constructed the central post through ignorance or otherwise—as happened in 1956 in the Littiras village—such a person required to pay a fine is called *matidand* which may consist of chicken or a pig.

In addition to the above, mentioned ceremonies (namely, the Ceremonial Hunting, Rice Seed Sowing and New Mango Eating) which are performed in the month of Chaitra (March-April), yet another important fair-festival, called the Mandai and/or Bazar, takes place in the same month in the area of our study. As already mentioned, it is first of all in the village of Hamirgarh that the necessary rituals concerning the Mandai/Bazar are performed in the shrine of Danteshwari Mata, and only then such fair-festivals can be arranged in any other village comprised under the Hamirgarh Pargana. It was on 2.4.59 that the Mandai took place in the Hamirgarh village for the Pargana as a whole, and the function continued till the next day. While it is under the overall supervision of the Manji of the Pargana (Thokru Dhakar by name) that the fair-festival takes place, the rituals are performed by the Dhakar priest attached to Danteshwari Mata, of the village of Hamirgarh, who is mainly assisted by the Telinga of the same village. The sellers from distant villages like Kelsur, Jagadalpur, Naganar, Sukma, Kokawada, etc., start arriving in the village from 1.4.59, but the real market is held from the next day and continues till 3.4.59. The rituals (puja) are performed first of all in the morning of 2.4.59 by the Dhakar priest in the shrine when *rathi* is offered to the deity, and then the symbols of different deities both from the villages comprised under the Pargana as well as outside the Pargana are duly received by him at some distance from the shrine and carried within the precincts of the shrine. Towards the evening all the deities (as represented by their flags and other symbols) along with Sirahs possessed by the respective deities are carried in a procession through the market, escorted by the Manji (or his son) who is carried on a chair borne on the shoulders. The dancing parties composed of the Dhurwa form an

important part of the procession. Then the people attending the Mandai start cooking their meals—the rice, and *dal* being supplied to them ; but cooking is done in different groups on the bases of village and caste affiliations. Next day the real puja is performed by the Dhakar priest at about 10 a.m. by offering 7-wick arthi to all the deities assembled on the occasion, including the Sirahs possessed by deities. Later on, at about 12 O'clock a small buffalo as well as a number of goats are sacrificed. Then, the meals along with the meat of the goats are prepared and taken by all. Towards the evening, the deities start leaving, when they are ceremonially seen off. It was estimated that as many as 1,500 persons had assembled on this fair-festival, as on-lookers, attendants carrying the various symbols of the deities and dancers. Men, women and children attend from almost all the villages within the Hamirgarh Pargana as well as outside, and the whole atmosphere is festive, although largely interspersed with ritualistic activities.

In a similar manner, Mandai was held in the shrine of the Bahandarin Mata in 1956 by the four neighbouring village, Marenga, Tongpal, Littiras and Permaras. Invitations were sent to almost all the neighbouring villages, and the people attending this fair-festival were served with meals and wine ; some of the prominent people were even given cash of twelve paise to twenty five paise and those engaged in dance were supplied, in addition to cash, meals, rice beer and wine. Total cost came to about Rs 80 consisting of the rice (1 khandi, worth Rs 10), two goats (worth Rs 24), three cocks (worth Rs 6) and two pigs (worth Rs 40). Likewise, Mandai was celebrated in 1953-54 in the shrine of Hinglajin Mata by the Tippin Palia segment affiliated to the Cobra clan of the Marenga village, when invitations were sent to ten neighbouring villages, and the people assembled on this occasion were served rice and goat's meat as well as the rice beer (landa).

The next important ceremony performed collectively is called Gunetiar. It is called by non-Dhurwas living in the north Bastar as Amavas or Hareli. A week or so before the Amavas (New moon), in the month of Sravan (July-August), the mango-stones stored in the respective homes of the Dhurwa are crushed and eaten, but after these are offered by the two Pelac to their respective deities of the Muttak and Hinglajin Mata. The rituals performed on this occasion are similar to those described above. But after the Gunetiar the todu (bugle) is no longer blown in the village of Marenga, that is, the hunting stops from onwards.

After a month or two, another ceremony called the Kolta tiar or Dhan Nava, is performed, when some of the new rice is har-

vested and made into chura (changul). Hence this ceremony is also known as Ponchangul. But while the rituals are performed by the Permaras villagers on Monday in their own village shrine, it is on Thursday that Marenga and Tongpal villagers perform the same rituals in their own village shrines, and Littiras villagers offer puja on Wednesday in their own village shrine. The rituals connected with the Kolta tiar are not complete unless a chicken is offered by the concerned priests.

But it is the Laundel or the Diari that occupies an important place in the annual cycle of their public ceremonies. It is performed in the month of Pos (December-January) and continues for at least two days amidst the general rejoicing interspersed with the rituals which are performed in different shrines. The ceremony of the Laundel (Diari) started in the Marenga village on 28.1.59, when the four cowherds (Rawats) engaged in grazing the village cattle went to almost all the shrines mentioned above (including that of the Danteshwari Mata) to offer the rituals through the respective priests attached to the shrines. The rituals centered round the activity of tying the Geta (i. e., an ornamental string made of the Siari fibres fitted with knots, used in the neck of cattle) in different shrines, implying thereby that the cowherds were now free from grazing the village cattle and were returning the same to the cattle owners. Thus, of the four Rawats one was assigned to offer this sort of thanks giving rituals and went in the morning at about 8 along with the Pelac of the Marenkheria segment first to the shrine of Bhandarin Mata. After taking his bath, the Pelac brought out the sacred buffalo horn from inside the shrine and poured water on it. While some water was allowed to fall on the Geta which was kept on the mahua leaves upon the ground, a few drops were put on the bowing head of the Rawat as a mark of blessing. Then the Geta was fixed on the shrine and the sacred object reverently kept inside the shrine. Afterwards both of them went to the shrine of the Muttak, where the Pelac poured water on the central post representing the deity, and wine was offered as well as rice was kept in a lot in front of the central pillar. Thereafter, a few rice particles were placed by the Pelac on the bowed head of the Rawat. Then the Geta was fixed on the shrine, and the Pelac was served the wine brought by the Rawat and after serving him he helped himself. Later on, the same Rawat went along with the concerned Pujari to the shrine of Ladri Mata, where the milk-rice was placed on the stone image of deity as well as arthi was waived by the Pujari, and then the Geta was fixed on the shrine by the Rawat and a few particles of the milk-rice taken by the Rawat.

In the afternoon, rituals were again performed by the Pelac in the open ground lying close to the houses occupied by the Rawat. An egg was placed on the rice grains, and then a chicken was brought by the Rawat for sacrifice. While beheading its head, the blood was mixed in the rice which was kept separately in a leaf-cup, and the head was placed near the egg. Then wine was poured on the ground near the egg, and the rituals came to an end. Afterwards, wine was served by the Rawat to the Pelac and other elderly Dhurwas assembled on this occasion. In the meanwhile, preparations were made for cooking the rice and the chicken for the assembled ones, but the rice mixed in blood as well as the head was cooked separately for the use of the Pelac.

On next day, in the morning hours, in almost all the houses of the village, the following rituals were performed by the male heads of the families. First of all, a mahua twig was fixed in the courtyard which was smeared with cow-dung, and an earthen lamp was lighted. Then after washing the feet and the mouth, the head of the family made a drawing with rice powder (*podil*).

In the middle of the drawing an egg was placed on the rice grains, and after breaking it by a knife, its contents were watched for omens. Then the cooked rice mixed with turmeric paste and the pulses and vegetables was brought from inside and was served to the cows and bullocks.

On the third day, some more rituals were performed in the house of the Borka in the early dawn. In the open courtyard, a small portion was besmeared with cow-dung paste, where paddy was kept in a lot, and it was upon the paddy lot that the fresh rice beer prepared out of the mandia was placed. The Neutak then came over and placed a sword, battle axe and the musical instruments. A lighted earthen lamp was also placed close to the paddy by the Borka. Then the rice beer was brought over. Later on, after touching the earth by hands they bowed in all directions and stood up in a row, when they started dancing and singing in a chorus. Then the rice beer was served to all these sacerdotal functionaries, e.g., Pelac, Neutak, Borka, Dora and Borka.

It was, however, on the fourth day that the Dhurwa of the Marenga village assembled in the afternoon in an open ground where group dancing by both the sexes was performed after a while, but before the actual dancing started, the menfolk had come along with their cattle whose horns were adorned with new pieces of cotton cloth. As soon as the cattle were brought within

the sight of the assembled ones, the concerned Rawat would approaach the animal and remove the cotton cloth with great desterity. The Dhurwa womenfolk, too, came to attend this ceremony, carrying with themselves in baskets or winnowing fans 4-5 paili of the paddy, pulses, salt, chillis, etc., which would be duly handed over to the concerned Rawat woman. Then tobacco powder mixed with lime (curti) was given by the Rawat to both the menfolk and the womenfolk assembled on the occasion. Later on, the distilled liquor and/or rice beer specially prepared for this occasion were served to all the participants by the Rawat. It was then that the dancing started, where both the sexes belonging to the Dhurwa as well as the Rawat, indulged in a Jovial spirit. But the Mahar and the Bison-horn Maria and the Lohar and women were observed to be sitting separately though they too were served the liquor and the rice beer.

It may be added that until and unless the Laundel (Diari) takes place in the village, newly harvested mandia or ragi cannot be used for preparing rice beer ; otherwise, it is feared that their cattle would be eaten by tigers.

In contrast to the above ceremonies which are arranged in public, the rituals connected with the harvesting of paddy (Caru Cirana Jatra) are performed privately by all the Dhurwa male heads of the families who are believed to have settled in the village in the long past. Although some of the Rawat tenure-holders of the village (agricultural) land are said to have been settled in the village since a long time, but they perform the religious ceremonies connected with the harvesting of paddy, not by themselves, but through one (Dhurwa) of the sacerdotal functionaries or through one of the above-mentioned earlier settled (Dhurwa) heads of family. Strictly speaking, this privilege of performing the Caru Cirana ceremony seems to be confined to those earlier settled Dhurwas who are related to one another as consanguines, but it is reported that some of the Dhurwa belonging to Tiger clan (affines) are also performing these rituals themselves now. In any case, the present position is that all the later settled Dhurwa as well as all the non-Dhurwa tenure-holders owning the agricultural (paddy) fields in the village arrange to perform the rituals on their behalf by the Pelac/Neutak/Dora/Borka/Kicek.

Thus, it was on 4.12.58 that one of the later settled Dhurwa owning the paddy fields in the village arranged to perform the rituals concerning the Caru Cirana (harvesting) by the Pelac of the village. The ceremony started in the morning at 8 a.m., when

the Pelac and the concerned tennure-holder had finished their bath. In a small clearing of the field, the Pelac made a similar design, as was described above for Laundel, by means of a charcoal powder which was then overlaid with earth powder and turmeric powder. Then a few rice grains were kept in the middle of the design, above which an egg was placed. Later on, a few ripe paddy stalks were plucked by hand by the Pelac and kept by the side of the egg. Then, small seven rings made from tunga grass were placed on different portions of the design and the mung dal as well as egg shell pieces were placed upon these rings. All along, dhup (gum from the siari tree) was burning; after a while, the chicken was handed by the concerned tenure-holder to the Pelac. The chicken was first pecked, then the egg was broken, and then the chicken was sacrificed by the Pelac—its head was placed reverently on the top of the diagram while its body was thrown aside. Later on, a few drops of the plain water mixed with mahua fruits was put on the head of the chicken. The blood flowing out of the beheaded chicken was mixed with rice contained in a leaf-cup which was meant for the use of the male members of the concerned Dhurwa tenure-holder. Then, the rice beer was served to the Pelac and to others. Later on, meals were prepared at home and served to the Pelac and all others specially invited on this occasion. It should be remarked that after the performance of the rituals connected with the Cara Cirana Jatra, the harvesting of the paddy starts; till then, harvesting of the paddy is not done in the village.

CHAPTER TEN

PANCHAYAT SYSTEM

It has been mentioned earlier that the Dhurwa of Bastar lack a centralized authority to regulate their social and religious life. Instead, they possess what may be called the areal tribal councils, referred by them by the term of panchayat. Each of these councils exercises its control over the Dhurwa living in certain specified areas of the Dhurwa tract of Bastar. Such a panchayat in the area of our study is headed by the Cetia of Tongpal who belongs to the Dhurwa ethnic group. The Dhurwa who recognized the authority of Bhima Cetia of Tongpal as their headman (Naik) live in the six villages: Tongpal, Marenga, Littiras, Permaras, Marjum, and Tahakwada.

It is worthwhile to mention that the first four villages are traditionally grouped under the Hamigarh Pargana of the (former) Sukma Zamindari; and the (earlier-settled) Dhurwa living in these four villages not only regard themselves as the consanguineally related kins (Toler vaub or Kutab) but also they perform their annual ceremonies jointly in the common shrine at Tongpal, known as the Bhandarin Mata. The present position, nevertheless, is that the Dhurwa living in all the above-mentioned six villages, irrespective of the fact as to whether they are related to one another as the consanguines or as the affines (Saga), recognize the Cetia of Tongpal as their Naik (or headman).

While the office of the cetia is hereditary inasmuch as the succession passes from father to son, he is assisted in carrying out his functions by a council of Dhurwa elders. This council has neither a standing body nor is its membership fixed; the Cetia of Tongpal also does not directly select the elders. In fact, the composition of the council varies from time to time. Generally speaking, the members who "guide the collective action of the panchayat" are the prominent elderly males (*siyan log*) living in the above-mentioned six villages. They are well-known for their personal qualities (like oratory, organizing ability, etc.) and/or are holders of the secular/sacred offices (like the Pelac, Patel, Sirah, etc.). On certain occasions, the members participating in the council meetings represent some of the influential Dhurwa families/lineages/kin groups residing in the above villages.

The main function of such a tribal panchayat at present is to take cognizance of those branches of the social rules which required the pureficatory rites to be performed with a view to readmitting the guilty person into their community. In these cases, the presence of the Cetia of Tongpal (namely, Bhima) is essential, for not only he has to sprinkle the holy water on the guilty person, for which he is paid in cash, but also the guilty person has to bear the expenses of the ceremonial feast, where Bhima Cetia is the honoured guest.

Breaches of the rules, recognized by the Dhurwa in the area of our study as constituting serious social offences, requiring the expiatory rites, are as follows :

1 To accept the cooked food from a person belonging to an ethnic group "lower" in status than his own, e. g., the Mahar, the Ghasia, the Bison-horn Maria, the Bison-horn Maria Lohar, etc.

2 To enter into wedlock with a woman belonging to the "lower" ethnic group than his own ;

3 To be imprisoned in the jail for committing murder, etc.

While it was reported by our informants that the breaches of the above rule seldom occur, still two cases involving the violations of the rules marked (2) and (3) came to our notice and are reproduced below :

In the first case, a Dhurwa of the Marenga village, Ramu by name, had married Butki in the Tika from under the mistaken belief that she was a Dhurwa woman, for, Butki could speak Parji language as also behaved exactly like a Dhurwin. After leading a normal married life for about seven years, giving birth to three children, it was learnt that Butki was in reality a Gond (i. e., Bison-horn Maria) woman, who previously married to a Gond of the Sergipal village. In fact, her true identity was disclosed by her Gond husband who had succeed in locating her in Ramu's house in the Marenga village. What had happened was that the Gond husband of Butki has left her long back to work in Assam in tea gardens. After his return from Assam, he found that his wife had also left the village of Sergipal. Butki had wandered through different villages—working as a field and road labourer—she was ultimately brought by the Rawat and the Bhatra co-villagers of Ramu Dhurwa from a village in the Koraput district of Orissa. She had told them that she was a Dhurwin, having lost her parents during her childhood. Accordingly, when she was

brought to the Dhurwa village of Marenga to get settled there, Ramu whose wife had ran away from him some time back finally entered into wedlock with this hard working young woman of unknown origin.

Although Butki had deceived everybody about her birth and antecedents, still when her true identity was revealed she was not driven away from the house of Ramu, because her long married life and general good behaviour had impressed everybody and stood in her favour. Thus, her Gond husband who had come to demand the compensation (*kharcha*) from Ramu for having married his wife was paid after much haggling, Rs 15 in cash, five measures (pailis) of rice and one cock. Butki though released from the hold of her previous husband still belonged by birth to a "lower" group than that of the Dhurwa. As such, the tribal panchayat headed by Bhima Cetia of Tongpal decided that the circumstances of the case demanded that Butki alone need be formally admitted in the Dhurwa community (*Zat*). Accordingly, the Cetia performed the pureficatory rites (*nirul curral nindam*) by sprinkling holy water on her body and head. The holy water was procured ceremoniously from the shrines of the Danteshwari Mata of Hamirgarh village and the Bhandaria Mata of Tongpal village. The Cetia was paid for his services Rs. 5 in cash, while each of the council elder was paid Re 1 per head. In addition, a communal feast was arranged for as many as 20 Dhurwa men who hailed from different neighbouring villages. For this purpose, Ramu had to provide one pig and one goat, wine worth Rs 5 was also served to the assembled ones (including Bhima Cetia of Tongpal). It was estimated by Ramu that he had to incur nearly Rs 100 for entering into wedlock with a (married) woman belonging to a lower zat than his own (by mistake though). Unfortunately, Butki died a few months after she was admitted in the Dhurwa community, leaving behind her only surviving son, Shukra by name, studying in Class II in his village school.

The second case is concerned with Iyeti, the married sister of Mahengu Dhurwa of the Marenga village. Iyeti was found guilty of murdering her husband, Ramu of the Marjum village. According to Iyeti, it all happened suddenly in the winter of 1955 when she and her deceased husband were sitting in front of fire kindled in the countryard of their house in Marjum. Ramu drunk distilled liquor heavily and went on abusing and beating her. Ultimately, Iyeti, in exasperation, took hold of a burning stick and stuck it against the head of her husband who succumbed to death. She was duly arrested, and the court at Jagdalpur awarded her two

years imprisonment. During her period of imprisonment, it was her brother, Mahengu, accompanied by his wife, Sonadei, who visited her a few times. After her release, she preferred to stay in her brother's house in the Marenga village rather than to go over and live in her husband's house in the Marjum village.

When Iyeti returned to the village of Marenga, she was required by the panchayat to undergo the pureficatory rites, as she was considered to be polluted during her term of imprisonment for causing the death of her husband, unwittingly though. Accordingly, the holy water was procured from the different shrines situated both within and outside the village. This was ceremoniously sprinkled over her by the Cetia of Tongpal as well as by the head of the lineage group to which she belonged by birth. This ceremony was performed in the shrine of the Bairam Dev in the Marenga village, which is associated with her natal (Tiger) clan. The respective priests (Pelackul), belonging to the Marenkheria and the Tippin Palia segments of the dominant (Cobra) clan of the Marenga village as well as the priest (Pujari) associated with the Tiger-affiliated Dhurwas of the village, were specially present on that occasion. The other participants hailed from the neighbouring six villages, including the kins of the deceased husband of Iyeti. After the expiatory ceremony was over, a general feast was arranged by Iyeti's brother, Mahengu, to feed the Dhurwa present on the occasion. The main items of expenditure for the feast consisted of eight measures (pailis) of the rice, two pitchers of the rice beer (landa), one pig, one cock, wine worth Rs 2, salt, chillis, etc. The total amount approximately spent by Mahenga on this occasion was estimated by him to be nearly Rs 25 (including the fees paid to the Bhim Cetia).

Over and above, the violations of the above rules, the Dhurwa in the area of our study also take cognizance of the breaches of the following rules, though these are regarded as less heinous in nature, for, no expiatory ceremony is required for these violations:

1 To eat the new crops and fruits (like rice and ragi, mango and mahua) without performing the necessary ceremonies in public jointly with four neighbouring villages.

2 To break the taboos by constructing a house or a part thereof, or to perform the marriage ceremony, during the period when the sowing of the consecrated rice seeds is being celebrated by the cluster of four neighbouring villages.

3 To perform the fair-festival (Mandai/Bazar) in the village earlier than that celebrated in the village of Hamirgarh for the Hamirgarh Pargana as a whole.

While the breaches of the rule marked as (3) are dealt at the Pargana level (i.e., by fourteen villages forming the Pargana of Hamirgarh, irrespective of the fact as to whether the violations of the rule have been done by the Dhurwa or by others), the breaches of the rules marked (1) and (2) are dealt by the cluster of four (Dhurwa) villages forming a unit within the Hamirgarh Pargana (namely, Tongpal, Marenga, Littiras and Permaras. The punishment imposed on the guilty person for the violations of the above rules is generally to arrange for a pig/goat which is cooked and eaten together by the participants in an informal gathering. It may be added in this connection that the violations of the above-mentioned social norms were reported to be almost negligible.

In addition to the tribal council of the above description, we find another council (also called the panchayat) is at work in the area of our study. While the territorial sphere of the areal council of the Dhurwa is spread to a number of the neighbouring villages, the jurisdiction of the latter type of the council is confined to a single village hence may be termed the village council. In our intensively surveyed village of Marenga, the Dhurwa form nearly 80 per cent of the total population, while the rest of the village population is comprised of the Rawat, the Mahar, the Bhatra, the Bison-horn Maria and the Bison-horn Maria Lohar. Quite obviously, the village council is not an exclusive body of the Dhurwa, however, dominant they be both in size and position in the village; but its membership is open to all the ethnic groups living in the village (of Marenga). Like the tribal council, the members participating in the village council are also the prominent elderly males, representing the main lineage groups and/or holding the secular/sacred offices in the village. In fact, the selection of the village elders as well as the concerning of the village panchayat is largely left to the parties concerned ; the village headman (Patel) has practically no say in the matter. Of course, on certain occasions, some prominent elderly males from outside the village (e. g., the Pargana Manjhi, etc.) may be specially requested to attend the village panchayat meetings.

Since the major offences are dealt at present with by the police, so the functions of the village council mainly centre round in settling the minor civil and criminal matters pertaining to the

compensation demanded by husband whose wife had eloped with another man, and other petty quarrels arising among the villagers. The village council also holds its meetings whenever any government demand for taxes and labour are to be met with by the villagers as a whole. So also does it deal with the contributions to be made in cash or kind by the villagers for celebrating the annual ceremonies, individually or in common with neighbouring villages or on the Pargana level.

The venue for the meeting of the village council is any conveniently situated open place (e. g., the threshing floor, dancing ground, etc.). The procedure generally followed is that as soon as any misdemeanous occurs in the village the prominent elders of the village are informed. After the village elders assemble together at a commonly agreed place, the proceedings start when the versions from the complainant and the accused, as also of other witnesses, are heard. While oaths are frequently used by the parties concerned to establish their innocence, efforts are made by the village council to arrive at a compromise by discussion and persuasion, and the judgment is finally arrived at unanimously. The most common form of punishment is that of the fines which are imposed (as in the case of quarrels) on both the parties. The amount of fine thus realized is shared by all the participants, and the water-mixing ceremony is performed by the village Pelac to solemnize the happy ending. Similarly, in the case of an elopement the actual marriage expenses are determined, and the amount of compensation is finally settled by the village panchayat. Likewise, the contributions in cash/kind/services are fixed for the communal activities concerning the performance of any ceremony.

Now a few typical cases which were recently dealt by the Village Panchayat of Marenga are cited below :

The first case concerns a quarrel that arose between Shudu Bade Bhatra and Dharmu San Bhatra *alias* Raja Muria. Both of them had been residing in the Kana Para of the Marenga village for more than a decade, of course, with the due permission of the village Pelac and others of the Marenga village. While Shudu was mainly engaged in preparing the earthen tiles for the houses, Dharmu was working primarily as a tenant for the village Patel ; both of them, however, were supplementing their income by working as agricultural labourers. An ill-feeling existed between them on the ground that Shudu would not accept Dharmu as a Bhatra, and (as we learnt, later on) Dharmu was essentially a Raja Muria who would claim to be a Bhatra, albeit a San Bhatra. One day it

so happend that Dharmu's young son, Loknath, refused to graze the cattle owned by Shudu, perhaps, at the intance of his father, although he was already tending the cattle of others. On being provoked, Shudu became angry and while meeting Dharmu on the way he lost control over himself and starting abusing him, even threatened to kill him by means of bow and arrow. Though Dharmu listened quietly in the beginning, but after a while he answered him back and brought out the axe to fight back. Due to the intervention of the co-villagers, the quarrel did not take a serious turn ; but it was realized that the whole affairs should be referred to the village panchayat.

Accordingly, the panchayat was held at about 8 a. m. on 30.11.1958 in the open ground of the Kana Para. The elders who constituted the council were as follows :

1 Thokru (Dakar)—*Ex*-Pargana Manjhi of Hamirgarh Village.

2 Dhanurjai (Mahanti)—*Ex*-Forestor (Dafedar) of Tongpal village.

3 Sumit (Mahar)—The Kotwal of Marenga, Tongpal and Littiras villages.

4 Mansa (Sundi) of Tongpal village.

5 Ganga (Dhurwa) of Tongpal village.

6 Narsingh (Dhurwa)—The Pelac of Marenga village.

7 Raju (Dhurwa)—The younger brother of the Patel of Marenga village.

8 Kandru (Dhurwa) of Marenga village.

9 Sonu (Dhurwa) of Marenga village.

10 Murra (Dhurwa) of Marenga village.

11 Shadu (Dhurwa) of Marenga village.

12 Sukalu (Mahar) of Marenga village.

13 Kamla (Mahar) of Marenga village.

14 Urra (Lohar) of Marenga village.

It is worthwhile to mention that neither the Rawat nor the Maria from the village were called for the village meeting. In fact, all the hamlets (para) of the Marenga village were not represented in the panchayat meeting. The last three (viz., 12-14)

were specially asked to be present because they happend to be present when the quarrel between Shudu and Dharmu had reached the climax. Obviously the neighbouring house holders of Shudu and Dharmu largely attended the meeting. Regarding the elders from outside the village (viz., 1-5), they were contacted by Dharmu and Shudu separately and persuaded to attend the meeting. In fact, they actually participated as full members in its deliberations. While Thokru and Dhanurjai were specially requested to sit on a cot spread on the ground, the remaining elders took their respective seats on the bare ground, forming a semi-circle. Both Dharmu and Shudu, however, sat in the opposite corners.

The proceedings started when Dharmu with folded hands bowed his head on the ground and described the facts which led to the situation as described above. Shudu listened quietly to all the charges levelled against him, and on being questioned he admitted that he had misbehaved under the evil influence of the drinks; but made a counter-charge accusing Dharmu of provoking him and insulting him time and again. Then the testimony from other witnesses was taken and a general discussion followed. It was finally decided that a fine of Rs 5 should be imposed on Shudu, thought it was first suggested that a deterrent fine of Rs 15 should be imposed upon him for disturbing the peace in the village. Dharmu was also asked to pay Rs 5; but more or less as a deposit for his good behaviour, and as such he was to pay Rs 5 later on, according to his convenience. But a fine of Rs 5 was required to be paid by Shudu then and there, which he paid instantly. From this amount, a few bottles of distilled drinks of mahua were purchased for some of the participants, while the rest of the money was shared among them at the rates varying from twelve to twenty five paise per head. Thokru and Dhanurjai, however, being paid Re 1 in cash, as a mark of respect. Before sharing the amount, the water mixing ceremony was performed by the vilage Pelac (Narsingh Dhurwa). This ceremony consists essentially of invoking the Earth (Mati) deity and putting a few particles of rice inside a brass lota containing water. If the two rice particles meet together at the bottom, the omens are read as favourable, otherwise, it is considered that the parties may not have a happy and harmonious relation with one another; but generally the omens foreshadow favourable results. After reading the omens, Narsingh Pelac poured the water inside four leaf-cups. These leaf-cups were placed in the hands of Shudu, Dharmu, a witness (Raju Dhurwa) and Narsingh Pelac. After changing these leaf-cups among all these four persons, the water was drunk by them. And, thus, the panchayat meeting came to an end by about 10 a.m.

amidst the general mirth and fun (participated by the complainant and the accused also) caused by the intoxicating drinks.

The second case also deals with a quarrel that arose between Chaitu Dhurwa and Boda Bison-horn Maria. Both of them though close neighbours residing in the Patel Para of the Marenga village were not friendly towards each other. One day it so happened that Chaitu directly accused Boda that it was because he was having some unknwon malevolent deity (Devi), so his children were suffering from sorts of ailments. Boda denied these charges ; but since Chaitu was the pujari of the shrine associated with the Neutak kin group (Jama), and enjoyed considerable influence, so his words carried great weight. As such, Boda realized that he would have no peace so long as he continued to live as Chaitu's neighbour. Accordingly, he constructed a new house far away from Chaitu's dwelling house in another hamlet (namely, Dhurwa Para). But even after living in the new house, Chaitu continued to be unfriendly towards him and went on pestering him with the same old charge. The matters reached to such a pass that the village panchayat was convened, primarily at the instance of Boda.

When the village council met on the appointed day in the threshing floor adjacent to Chaitus house, it was realized by the assembled ones that since enough members had not gathered, so it was held that the meeting should be postponed till next day. On the next day at about 12 noon, not less than twenty persons (including the *ex*-Pargana Manjhi) had gathered at the same venue. After hearing the versions from both the parties, it was decided that since the quarrel between Chaitu and Boda involved the question of the invisible spirit (Devi), so the verdict of the presiding deity of the Pargana of Hamirgarh (namely, Danteshwari Mata) was needed. Accordingly, a party of seven participants (including Chaitu and Boda) went over to the shrine of the Mata in the Hamirgarh village. The verdict given by the Mata (as shown by the fall of a single rice particle from the lot of the rice mixed in milk placed on the top of the stone image of Danteshwari Mata) was that Chaitu's accusations were false. Nevertheless, when the panchayat met again, it was decided that both Boda and Chaitu should be fined. While Boda was required to pay a fine of Rs 10 which was to be shared by all the participants. Chaitu was to arrange for a goat which was to be killed and portions of its meat to be given to all the participants ; furthermore, both of them were asked to contribute Rs 8, out of this amount distilled spirit was to be purchased and served to all the village elders attending the meeting. After extolling the virtues of living together amicably

and invoking the aid and blessing of the Earth deity, the Pelac of the village solemnized the occasion by mixing the water and changing the leaf-cups, containing the water, among Chaitu, Boda and 1-2 others witnesses.

The other cases dealt with by the village panchayat relate to the compensation demanded for eloping with (as among the Rawat) a widow and (as among the Dhurwa and others) with a married woman. In the first case, it was on 10.3.58 that a group of the Rawat from the distant village of Oler had come over to the Marenga village to demand the compensation from Sahadev Rawat for having eloped with and keeping (Rakha) Sukti, a young Rawatin widow with a minor child from the Oler village. As soon as Sahadev heard their demand, he contacted the village elders and by about 2 p.m. as many as eight Dhurwas and eight Rawats of the Marenga village assembled in the open ground near the house of Sahadev. At first, the Oler villagers demanded Rs 40 as their *kharcha* (compensation) for keeping Sukti. This demand was vehemently opposed by the Marenga villagers. After a great deal of hot discussion, it was decided that the following articles should be paid by Sahadev to the Oler villagers: Three measures (pailis) of rice, one goat and Rs. 7 in cash. A few days later on, Sahadev served the distilled drinks of mahua to all his village elders who had assembled and helped him in the settlement of kharcha.

In the second case, a dozen Dhurwas from the Chindawada village had visited the Marenga village on 19.3.58 to demand the compensation from Cheetu Dhurwa, for his son (Sahadev) had run away with and was living with a young married Dhurwa woman (kachedi) from the Chindawad village. On hearing their demand, Cheetu informed the village elders and by about 9 a.m. as many as eighteen Dhurwas, four Rawats and the Mahar Kotwal assembled in the open ground lying adjacent to Cheetu's house. The two parties sitting opposite to each other argued for a long time by citing precedents and describing the actual expenditure of the bride-wealth paid for marrying Kachedi. Tempers often ran high and every time it looked as if the two parties would come to physical violence. But neither Cheetu nor his son participated in the discussion. Kachedi too was found to be attending to her normal routine within the house, unconcerned and untouched. Finally, by about noon a compromise was arrived at, and Cheetu agreed to pay Rs 30 in cash, four measures of rice and a cock to the Chindawada party. This was solemnized by the water mixing ceremony. Later on in the same afternoon, wine worth Rs 5 was

arranged to be served by Cheetu to the village elders participating in the panchayat meeting.

The third case of this description deals with Sahadev Dhurwa, the son of the village Pelac. Sahadev though duly married to Sonei since a number of years had developed intimacy with a married woman from Kodripal village (Devali by name). After a while, Devali ran away from her husband and started living with Sahadev along with her co-wife, Sonei. On hearing this news, Kodripal villagers visited the Marenga village to demand compensation from Narsingh, father of Sahadev. Narsingh accordingly informed the village elders when nearly twenty persons assembled to discuss the terms of the settlement of the compensation. After a long drawn-out discussion between the two parties, Narsingh was persuaded to pay Rs 80 in cash, five measures of rice, one goat and one cock to the Kodripal villagers. The village panchayat was, as usual, later on treated to wine worth Rs 6 (Narsingh having paid Rs 5 and Kodripal people the rest of Rs 1).

As already mentioned, the village council also holds its meetings whenever any Government demand is to be met by the villagers in common, or for celebrating a ceremony individually or jointly with other villages. Thus it was observed that a meeting of the village elders (consisting of thirteen Dhurwas, two Mahars, two Bison-horn Marias and three Rawats) was held at about 4 p.m. on 28.3.58 in an open place, used as a threshing floor, lying near the dwelling house of the village Pelac. In that meeting, a number of the related issues pertaining to the monetary transactions were taken up for discussion and settlement. One of the issues was to the effect that a few years ago the Marenga villagers were asked to pay Rs 25 collectively as the Jan Pad cess (?). After making the payment, this amount was refunded back, as the said due was required only from the Thekadari villages and not from such Kham villages as the Marenga village. This refunded money was duly spent by the village elders for such communal purposes as the Mandai, etc. In 1958, however, a notice was served to the Marenga villagers through the concerned Patwari that they should remit the arrear of Rs 25 due from them. Since Phagnu Dhurwa was the Patel of the village when the amount of Rs 25 was initially collected and eventually spent, so he was authorized to collect again this amount of Rs 25 to meet the government dues. Since the time was short for making the payment to the government, so in order to save time it was proposed in the meeting that Phagnu should meet the government demands from the sale proceeds of his bullock amounting to Rs 45,

and the village elders assembled in that meeting promised to subscribe their respective shares to Phagnu, the *ex*-Patel of the village.

In a similar manner, a meeting of the village elders was held at about 8 a.m. on 6.1.59 in the same open place. The meeting was attended by as many as seventeen elders, consisting of eleven Dhurwas, three Rawats, one Mahar, one Bison-horn Maria and one Maria Lohar. The panchayat had assembled with a view to fixing the dates for the celebration of the Laundel (Diari) festival in the village. It was decided finally that the said festival would be celebrated in the village from the 28th to 31st January, 1959. It may be pointed out that the dates fixed by the village council should be convenient to all the villagers, for in this season marriages are usually performed by the Dhurwa, Rawat, etc., living in this area. The dates should also grant enough time to the villagers for making such preparations as, for example, to purchase the new cloth, to prepare the rice beer, etc. Furthermore, the festivals should not be celebrated in the village on the same date when this festival is being observed by the neighbouring villages.

Finally, we may mention that another village panchayat meeting took place on 11.3.59 in the same threshing floor, attended by fifteen persons, both the Dhurwa and others belonging to the village of Marenga. This meeting was convened to determine the contributions to be made by the villagers for participating in the Pargana Mandai fair-festival which was to be celebrated in the Hamirgarh village from 2.4.59 to 4.4.59. After a prolong discussion, the village panchayat decided that, except the Tippin Palia householders, one Paili of rice worth twenty-five paise from the Nagarias (i.e., owners of large fields) and two Sulis of rice worth twelve paise from the *thotias* (i.e., field labourers) should be realized to meet the expenses connected with the celebration of the Pargana Mandai. It was expected that while the Tippin Palia householders would subscribe a sum of Rs 5, the Nagarias would pay Rs 6·62 and the collection from the thotias would amount to Rs 6.75. Thus the total sum to be collected from all the householders settled in the village of Marenga would amount to Rs. 18.37. Out of this sum, one goat, jaggery, flowers, wine, etc., would be purchased for offering the same, as the contributions from the Marenga village, as a whole towards the celebration of the Pargana Mandai. Further, it was decided that the symbols of the various deities propitiated in the village would be carried in palanquins which would be escorted by five Sirahs (mediums) and attended by twenty young Dhurwa male dancers.

Summary

The foregoing descriptive account concerning the panchayat system among the Dhurwa of Bastar shows that there are two distinct councils (panchayats) at work. One of them is the tribal panchayat which is headed in the area of our study by the Dhurwa Cetia (or Naik) of Tongpal. Its jurisdiction is spread to six neighbouring (Dhurwa) villages; hence may be referred as the areal tribal council. Its main function is to deal with those cases which involve the branches of the socially accepted norms and, as such, require the guilty person to undergo the expiatory rites at the hands of the Cetia of Tongpal. While the office of the Cetia is hereditary, he does not directly select the elders (Siyan log) constituting the tribal council. Neither has this council a standing body nor is its membership fixed or permanent. Generally speaking, the members of the tribal council are those prominent elderly (Dhurwa) males who are known for their personal qualities and/or holders of sacred/secular offices and/or represent the influential families residing in any of the six villages recognizing the authority of the Cetia of Tongpal as their headman (Naik). Two cases involving the violations of the social rules were recently dealt with by the tribal council of the above description and have to be mentioned.

The other council (panchayat) has been operating at the level of the village; hence may be termed the village council. In a village dominated by the Dhurwa both in terms of their size and influence (such as Marenga village), the membership of the village panchayat is not confined to the Dhurwa only, but is open to all the ethnic groups living in the village. It has been observed that the selection of the village elders (Siyan log) as well as the convening of the village panchayat is largely left to the parties concerned. On certain occasions, some influential persons from outside the village are specially requested to attend the meeting of the village panchayat, though usually the members constituting the village council are mainly the holders of the sacred/secular offices in the village and/or happen to be the close neighbours /friends/kins of the parties concerned. It is upto the particular village elder to participate in the village panchayat or plead some excuse for his inability. As such, the composition of the village council varies from time to time. The main function of this panchayat is to deal with matters affecting the law and order in the village, e. g., to settle the terms of the compensation demanded by a husband whose wife has eloped with a man living in the village or to persuade the concerned parties residing in the village to come to an amicable settlement whenever any quarrel or dispute arises

between them. It also holds its meeting whenever any government demand for taxes and labour is to be met with by the villagers, as a whole ; so also it fixes the amount and rate of subscription for celebrating a joint festival or ceremony. A few typical cases recently dealt with by the village panchayat have given to show its actual workings and the composition.

In the light of what has been mentioned above, it may be said that the (areal) tribal council is exclusively a Dhurwa organization, headed by the Cetia or the Naik (headman) to deal with such social offences which threaten the solidarity and cohesiveness of the Dhurwa living in specified areas of Bastar. A village council, on the other hand, is a multi-ethnic group, meant for settling the matters affecting the law and order in the village as well as to secure the well-being of the villagers.

It may finally be remarked that other ethnic groups of Bastar (namely, the Mahar, the Rawat and the Bhatra) have also an organization of their own which is headed by their headmen (Naiks), "to regulate their intra-and inter-ethnic relationship in accordance with their established customs". The territorial sphere of this council is spread, as among the Dhurwa, to a number of villages. But what is interesting to note is that out of the six villages recognizing the authority of the Cetia of Tongpal, only four form a Kinship and ritual unit, and constitute a part of the Pargana of Hamirgarh. Even at present, certain breaches of the norms are taken at the level of the Pargan, while others are dealt with by the cluster of four Dhurwa villages ; but these social offences are considered to be less heinous in nature than those which are dealt with by their (areal) tribal councils.

CHAPTER ELEVEN

FOLK-TALES

Folk-tale No. 1

Once there lived in a village a man with his wife. The man would often go out for hunting in the forest and kill the birds (*lava*) thus they continued to live for a number of years. One day the man asked his wife who had become pregnant to prepare some *ladu* (powdered rice parched and rolled into balls), which he carried in his little finger. It so happened that he could not kill any bird or animal on that particular day, and so when it was dark he climbed on the *pikad* tree (*el meri*) to spend the night there. On that very night, his wife was due to give birth to a child. As soon as this fact was known to the animate beings (Jenov jat or Jiv jentav) they all hurried towards the house of the hunter so as to be physically present at the actual time of the delivery. While they were proceeding towards that particular house, an inquiry was made from that particular el meri on which the hunter had taken shelter as to whether it was not going to attend the birth of the child. The el meri expressed its inability to join them for the simple reason that a man (*manja*) was sleeping (*mad*) upon it. This talk was overheard by the hunter, and he wondered whether they were referring to his wife's delivery. After a while, the animate being returned back to their respective folds. It was then that the (mahua or irpul) tree standing by the side of the el meri reported that at the time of the birth of the son the only animate being who could get a handful of water (when the child was being washed ?) was the tiger. Hence, the life of the infant rested solely in the hands of the tiger. It was further foretold that the boy would grow up normally and get married in due course of time and then would construct a new house to live with his wife separately from his father. But while constructing the new house, he would be going over to the nearby forest to cut the *pakdi* (bamboo), when he would be attacked by the tiger and meet his end. The hunter overheard the talk that ensued between the el meri and the irpul trees. So, next day in the early hours of the morning, he left for his house. On reaching there, he found that his wife had actually given birth to a son. On seeing him, his wife became very angry for not only did he remain absent at the time when his wife had given delivery, but also he had returned empty

handed without any kill. However, the hunter managed to pacify his wife with words of cheer and comfort.

Thus time passed and the day arrived when the name-giving ceremony (chetia) of the boy was to be performed. Such articles as the parched paddy, mahua and gur were arranged well in advance for that occasion. So also were prepared in time seven leaf-cups of the tora oil and seven leaf-cups of the turmeric paste, for, the same mixture was to be applied on the body and the face of the infant as well as on the mother and the paticipants. The boy was duly given the name of Phul Singh and wine and rice beer freely flowed among the invited guests. Time again flowed by, and Phul Singh reached the marriageable age. So, his father started the marriage negotiations with a girl called Rima Garh Rani. After making a series of visits and fulfilling other formalities, the marriage between Phul Singh and Rima Garh Rani was performed, being attended by the people belonging to the Desh and or Raj. The married couple continued to live in the house of Phul Singh's father for a number of years ; but then Rima Garh Rani suggested to her husband that she would like to live in a house of her own. Phul Singh readily agreed to this suggestion of his wife with the result that he went to a nearby forest to cut the bamboos for constructing the doors and walls of his house. As soon as the father of Phul Singh learnt about the intention of his son, he wanted to accompany him to the forest ; but Phul Singh did not allow him to do so. So the father had no other alternative left but to follow him secretly. While Phul Singh was engaged in cutting the selected pakdi bamboos, the lurking tiger pounced upon him, but before he could touch Phul Singh, his father being a good hunter managed to kill the tiger outright and the life of his son was saved for the time being, as the later events showed that Phul Singh was very much surprised at this strange happening, and his surprise turned into joy when his father related to him the full story of his life.

Thinking that the danger to his life averted, Phul Singh opened the tiger's mouth and remarked that, but for the timely help of his father, the same mouth of the tiger would have devoured him. Then he started crushing the teeth of his adversary, but while thus engaged, one of the teeth of the tiger got struck in him so deeply that Phul Singh fell down dead. It was a great shock to the father, but what could be done ! So, he had to send a word to all the consanguineally related and affinally related kins (kutamb and saga). It was with their help and co-operation that Phul Singh was buried in the grave. The old father and mother of Phul Singh were heard saying that *Bhagwan* (or *Mahaprabhu*) did not allow them to live happily with their only son.

FOLK-TALE NO. 2

A Dhurwa lived with his wife in a village. They had a son and a daughter. The son who was much older than the daughter, was named Chitar Doba *alias* Boda Doda, while the daughter was fondly called Kitti (mouse) Rani. When she was a small child she used to play within the courtyard of the house. One day she asked her elder brother to arrange for a pestle and a winnowing fan. When he brought her these articles, Kitti Rani collected dust (*guda*) lying about and started breaking it into powder by means of the pestle, and then she would separate the harder particles from the powdered dust by means of the winnowing fan. She used to play like this right after taking the milk (gau-ras) and cooked rice in the morning. Thus she grew up in years and then asked her elder brother to prepare a new house where all of them would like to live together. Chitar Doda *alias* Boda Doda accordingly prepared a new house in about a week's time. He also prepared a plough for his own use and went to plough the fields along with others, thereby earning his livelihood.

After about 12 or 13 years, Kitti Rani felt that she should henceforth cook the meals. So she requested her mother to let her prepare the meals, so that her mother would take rest. This was agreed by the mother as she was growing tired of attending the household chores. Next day, Kitti Rani started the day by going to the water source to fetch water in the metal vessel (*gagra*). On reaching there, she first of all cleaned her teeth with a twig and then removed her clothes (*luga*) for taking the bath. After taking the bath she put on dry clothes and washed the vessel. Then she filled the vessel with water and kept it on her head and returned back to her house slowly, passing on the way the buffalo (*cir*) and bulls eating grass. On reaching the house, she crossed the courtyard and kept the vessel down. Then, she took the broomstick and started sweeping the rooms inwardly thinking how big the house was! After collecting the dust, she threw it outside the house. Thereafter she brought fuel and burnt it inside the oven. She then took up the earthenware vessel (cora) and filled it with a small quantity of water (nir), and after covering it with a lid, she put it on the oven. When the water had boiled, she put the plain rice inside it. As soon as the rice was sufficiently cooked the powdered mandia (ratel) millet was brought and after mixing it in plain water the same was put inside the earthen vessel containing the cooked rice—thus the pej (cava) was prepared. Then, the earthen vessel was brought down. At this stage Kitti Rani began to wonder as to what vegetables (raba) she should prepare. She

decided to cook cenov (horse gram) and masudir pulses. So, she cleaned the same on the winnowing fan and then put these pulses inside the earthen vessel, filled it with water and covered it with a lid. When it was ready, the tamarind, onions and garlic were fried (*bagar*) in the oil, and this bagar was poured inside the vessel containing the pulses. Then, salt and chillis were added and the pulse (vegetable-raba) was ready. Thereafter, she prepared leaf-cup and then waited for her elder brother to return.

Chitar Doda alias Boda Doda at this time stopped his work in the field, as the time (*ber*) for taking the means had arrived. So he returned to his home, carrying the yoke on his shoulders. Then he went towards the water source cleaned his teeth with twigs, removed his clothes, took bath and put on dry clothes. When he reached home, his sister gave him water to wash his feet, hands and mouth. Then, he sat on a wooden seat (*peeda*) and ate his meals which consisted of the cooked rice, pej and pulses (raba or sag). After he had filled his "one domni of stomach", he washed his mouth and lighted a *bidi* cigarette. Afterwards, he decided to go to his fields to work there. In the afternoon, Kitti Rani again swept clean the house and cooked the rice, etc. Towards the evening, her brother returned from work and tied the bulls (Bada Singia and Dabra Singia). Then he washed his mouth, hands and feet and ate his meals by sitting on the wooden seat. After this, he went over to sleep on a cot. As soon as the cocks and the peacocks started crowing in the early hours of the morning, he got up cleaned his mouth and put the powdered tobacco mixed with lime (*curti*) inside his mouth. Then he took out his bullocks to the fields for ploughing.

In the meanwhile, Kitti Rani woke up and realizing that her elder brother must have already proceeded to work in the fields, she too resumed her household chores by fetching water, taking bath and cooking rice. While she was thinking as to what vagetables or pulse to prepare, she saw suddenly a pigeon (*pareda*) sitting on a wall. She at once caught hold of it and killed it. After roasting (*catata*) it, she first cut it into pieces and started to cook it. When it was prepared, she made the leaf-cups and waited for her brother—thinking all the while that he was getting late. However, where Chitar Doda *alias* Boda Doda arrived at his usual time, carrying the yoke on his shoulder, he went to the water source to clean his teeth and wash his body. Thereafter he returned back to his house and ate his meals. After this, he rested a while smoking bidi. Life went on like this for some time. Then one day his sister asked him to help her to bring and clean the mandia

millet (ratel), as the same was required for preparing the rice beer (landa). It took nearly a week for both of them to clean and dry up this millet. In the same manner, kosra millet (koyla) was also cleaned and dried in the sum. It was really a great job for Kitti Rani to keep away the cocks and pigs from eating the millet while drying up the same in the sun. Then, she decided to call her neighbouring womenfolk to help her to ground the millets into powder. The womenfolk related to Kitti Rani as (classificatory) Anya, Bai, Andil, etc., came to her request, along with their winnowing fans and pestles. Under the shade of the house, the womenfolk started pounding the millet (mandia and kosra) as well as the rice by means of their pestles, thereby making the sound of *kilang galong,* as the bangles worn by the womenfolk would go up while raising the pestle to pound the food-grains into powder. Some of them, however, were engaged in sifting the food-grains from the winnowing fans. When the time for eating the meals arrived, Kitti Rani brought the cooked rice, the gruel and some vegetables or pulse. Then the womenfolk assembled together, washed their respective hands and mouths and took their meals. After this, they took rest for some time as well as put *curti* (tobacco powder mixed with lime) inside their mouth. Then they started their work, for, it was realized by them that their work was theirs (i.e., nobodyelse would do the work for them). Towards the evening, they stopped their work when Kitti Rani gave to each of the womenfolk small broken pieces of the food-grains (*kenki*) lying about the mortar holes. Then Kitti Rani asked them to turn up for the work next day also. The womenfolk assured her that they would come with pleasure.

Thus, Kitti Rani prepared the rice beer (landa) out of the powdered rice and the millets. Then, came the cross-cousins (ayil) of Kitti Rani, along with other youths of the village(s). The youngest ayil of Kitti Rani took hold of the hand of Kitti Rani, for he wanted to marry her. And, so the marriage (curca) of Kitti Rani was celebrated duly.

Folk-tale No. 3

There was a widow living with her son (*porta*). One day the porta child (orphan) asked his mother to go to the blacksmith (Lohar) and get whatever article of iron was lying about in his smithy. While the mother was engaged in her search, the blacksmith inquired from her about her object. On learning the object of search from her, the blacksmith gave her some iron from his smithy. The porta child then fixed the metal pieces on the

bamboo spikes. Later on, he again asked his mother to go and fetch some cotton thread from the weaver (Mahar). When she returned with the cotton thread (keli), the porta child entwined the bamboo spikes in such a manner as to make a snare. This snare was fixed in a field while the porta child secretly sat under a tree (*bad*). In the meanwhile, three birds got entangled in the snare. The porta child then brought these birds home and asked his mother to exchange them with paddy. The mother accordingly brought the paddy which was used for cooking their meals. Next day the porta child managed to kill seven birds, some of which he exchanged with paddy, while others he and his widow mother ate at home. But before eating these birds, the porta child removed the paddy (rice) from inside the birds. Thus, the birds killed by the porta child not only were his only source of livelihood but also helped him to collect in six to seven years as much as five pailis (i.e., ten seers) of paddy lying inside the bodies of the birds captured by him through the snare.

Then, he thought of swing the five pailis of paddy inside the fields. So, he went over to a nearby jungle land, cut the trees as well as the bushes in a specified area, and set the same on fire, thereby making a marhan field. When the rainy season (*vani idkita*) arrived, he was ready with plough but not with the bullocks. So, he purchased wine from a Sundi by exchanging it with two birds. With this wine he sent his mother to the Dora for getting two bullocks with which to plough his marhan fields. The Dora refused to take wine, as he did not want to hand over the young bullocks to the porta, because (as he said) he would prefer to give his bullocks even to a passing-by Mahara but never to a porta child. So, the mother returned back to her son along with the untasted wine. The porta child himself took the wine, and next day went to kill the birds with the help of his snare. He managed to kill eight birds and asked his mother to go over with these birds to the blacksmith and asked him to prepare the iron blade of a spade for him. He also told her that in case he was reluctant to prepare the same for him then he would kill some more birds next day and send the same to him. The blacksmith, however, willingly agreed to work for him in exchange of eight birds, remarking that for the sake of dharma he would immediately start the work. Next day the iron blade was ready and the porta child fixed it on a handle and left for his marhan fields to dig it with the spade. For four days he went on digging, and then the paddy was sown. The fate (*karam* or *tagdeer*) of the porta child was good, for by putting little work his field was growing plenty of paddy. Since his marhan field lay near the forest, he prepared a platform in

order to protect the paddy growing in his fields from the marauding animals.

One day, as he was sitting on the platform (macha) with legs hanging down, a tiger came stealthily and stood under the macha. The tiger asked him to come down, but the porta child refused to oblige him for fear lest he would eat him. The tiger, then, threatened him that in case he would not come down his legs would be pulled down by the tiger. The porta child was, however, assured by the tiger not be afraid of him, but only to come down to listen to him. When the porta child came down trembling, the tiger told him to go to the village settlement and to report him as to what was going on there. Accordingly, the porta child visited the village settlement, but could find nobody speaking or making any sound within the houses. It was, however, in the house of the Dora (who had refused to give him the cattle for ploughing) that the young son of the Dora was boiling something with the result that quite frequently the sound (of the *gudur-gudur*) would be heard. So, the porta child reported to the tiger that except this sound he heard nothing else. Then, the tiger asked the porta child not to be afraid of him any time ; but he confided to him that very soon he will carry of the son of the Dora. Accordingly, the tiger left the porta child and went to the direction of the village settlement. The dogs started barking (*liv-liv-lav-lav*). In the meantime, the Dora's son felt like making water, and as soon as he opened the door the tiger jumped on him (*pode tirata*) and carried him *via* the machan of the porta child towards the forest.

Soon after, the Dora and his wife learnt that their son was carried off by the tiger. So the villagers were called. When they had assembled, they carried the weapons in their hands and blowed the horns (*todi*). Then they went in search of the missing boy. When they reached the platform of the porta child, the porta child directed them to proceed toward the forest where the tiger had carried over Dora's son. When an inquiry was made from him as to whether he had seen him being carried, the porta child replied that he had actually seen it, but being alone he could not do anything to save Dora's son from being killed. However, they soon found the dead body of Doar's son, and the matter was reported to the police. Later on, Dora's son was duly buried, and it was while returning through the machan of the porta child that the Dora saw the rich harvest of paddy growing in porta's marhan's fields. He grew very angry at this and told the villagers that the paddy growing in porta's fields was like the one growing in his own fields, hence he had stolen it from his fields. The villagers believed

the Dora's account with the result that they cut down porta's paddy from his fields and distributed it amongst themselves, leaving only two maunds. With this paddy he purchased a small bull of variegated colour (*chit-kabra*), and made up his mind that since they had deceived him so he would deceive them likewise.

Accordingly, he announced to his villagers that since he was the only man to possess a bull of such a colour, so if any cow would deliver such a calf it would be claimed by him. Everybody agreed, including the Naik and Paik as well as other elderly men. The Dora also did not object to such an announcement. It so happened that shortly afterwards the cow belonging to the Dora gave birth to a calf bearing such a colour. So he went over to him and claimed it as his own. Thus, during the six to seven years, he claimed many a calves showing this colour, and his cattle increased in numbers with the result that he became a *sahukar* (money lender), owing a number of fields as well. Then he was married with his cross-cousin (*mamen-mal*), and the marriage was attended by a large number of people. Thus, he lived happily for a number of years.

FOLK-TALE No. 4

Al Dora was living in Orangal Garh (Warrangal ?) with his wife. They had seven sons and seven daughters. Al Dora was often going out to the forests for hunting animals and birds. Once he asked his wife to prepare *ladu* (bedrul) for him, as he intended to go to a distant forest for hunting. He remained for a long time in the forest, but could not find any animal or bird. One day he came across a mouse deer (*kurree*) and followed it. While being chased by the hunter, the mouse deer felt thirsty and went to a tank to drink water. When the kurree was taking water, the baby within her womb warned her that she should make haste, as the hunter was closely following her foot prints. But the mother assured the baby within her womb not to worry, inasmuch as in a few days' time (to be specific, on Sunday) it would rain so heavily that everything would be washed away completely and wholly. This talk was overheard by the hunter, and so instead of killing the mouse deer, he proceeded hurriedly to his own house. He informed his wife and other elders about this news. It was decided by them that they should eat and drink and be merry among themselves for the two days let to them, for on the third day (namely, Sunday) they were doomed to death and destruction. Accordingly, they enjoyed themselves to their hearts' content, as if, they was celebrating the festival of Mangoes (Medi tiar). But, Al Dora was careful in one respect. He managed to get hold of

a vessel of iron, which was prepared by a blacksmith. In that vessel, he kept one of his sons (named, Ladra) and one of his daughters (named, Ladri) inside the vessel. He also kept a large quantity of *cura* (puffed rice) and other provisions inside the vessel and closed the same sacrely and put it hanging on a pillar (*khamba*).

As foretold by the mouse deer, it actually started raining on the third day (viz., Sunday), and the rain fell so heavily and persistently that the entire earth was washed away, leaving behind only water that remained everywhere. The result was that Al Dora and his wife along with others died. Only the metal vessel containing Ladra and Ladri floated on the water. It was then that Mahaprabhu asked the crow (kakal) to go over to the earth (*manj purne*) to see if anybody had escaped from the flood. The crow flew over the vast expanse of water and spotted the metal vessel floating about. But since there was nothing for the crow to sit upon, so it went back to Mahaprabhu and reported the matter to Mahaprabhu. Then, Mahaprabhu threw the nose dirt (mungud tachrana) in the water with the result that a silk cotton tree (boru meri) appeared. It was on this tree that the crow rested, and saw that except the metal vessel there was nothing else in the munj purne. The crow again reported accordingly. Then Mahaprabhu asked the bee (*bawra pinda*) to make the search for him. It went on searching till it grew tired. So it cried to Mahaprabhu for his help, when the seeds of the semi creeper (cevid) were thrown by the Mahaprabhu, and it was under this creeper that the bee took shelter. After a while, the bee went to Mahaprabhu to make a similar report as that given by the crow. It was, then, that Mahaprabhu asked the spider (*pelaj bandur*) to make a sort of ladder (*kul*) so that the metal vessel would be brought upto upor purne (upper world) from the manj purne (middle world). Accordingly, the metal vessel was brought up, and on being opened the brother and sister, (Ladra and Ladri) were taken out. Mahaprabhu then changed the complexion of brother and sister by a trick with the result that they could not recognize each other, and so they were married to each other. In the meanwhile, earth was prepared through the action of the tortoise (*mava*). Then, Mahaprabhu got down and collected the bones of every living being, and breathed life inside the bones of horses (*gural*) lice (*perul*), etc. Later on, he taught the menfolk how to cultivate the fields and celebrate the Mandai and other festivals. It was after some time that the descendants of Ladra and Ladri managed to get the Hazari flowers from the *kal pure* or *patal pure* (lower world) where dwell the one legged (*ek godia*) ones.

FOLK-TALE No. 5

The Raja of Daldaligarh had an only son, named Durb Sundar. It so happened that a serious disease (*rabi*) broke out in the Kingdom of the Raja with the result that all, excepting Durb Singh, died. Durb Singh was very much pained to see that he had lost everybody. As he had nothing to eat, so he started roaming about, eating whatever came in his way. Thus he continued to lead a wandering life for twelve to thirteen years till he reached Jagdalpur garh. Having grown tired and exhausted, he sat under a *bad* tree. An old potter came there to cut the branches and twigs of trees for manufacturing the earthern-ware vessels. Suddenly, his eyes fell on Durb Sundar, and on making an inquiry he learnt his sad plight. He took him to his house, where he told his wife all about him. When the potters' wife heard his story she was filled with pity for him. So, they gave him food and shelter and allowed him to live with them, for being childless they wanted someone "to dig the grave for them when they would die".

In this kingdom of Jagdalpur garh, the Raja had seven daughters. Once he inquired from them as to how they would live. All the daughters, excepting the youngest, told him they had him as their sole support. The youngest daughter, however, told him that it would be possible for her to live by dint of her own efforts. The Raja became enraged at this reply and decided to punish her. In the meanwhile, Durb Sunder feeling hale and hearty took up the work of the old potter. But one day while he was engaged in cutting the fuel from the forest he cut his feet with the axe. The result was that it was with great difficulty that he could drag himself back to home, where he applied the medicine (merud). Durb Sundar felt unhappy for sitting at home; so he started selling the pots prepared by the old potter in exchange of rice. But this was not a helpful way of attending to things; as such when he felt better he went to the forest in the early hours of the morning to cut the wood and to bring the same back to home. It was on this very day that the Raja asked his paiks (soldiers) to get hold of any man, belonging to any ethnic group, in the early morning, so as to marry him with his youngest daughter. As luck would have it, Durb Sundar was caught and brought before the Raja. He ordered that his youngest daughter should be married forthwith to Durb Singh.

After the marriage was over, Durb Singh and his wife (i.e., the youngest daughter of the Raja) were kept in a cell. They were

ordered to be confined till the remaining six daughters of the Raja were duly married. Thus for nearly six years the Raja's youngest daughter along with her husband Durb Singh remained in custody. They were kept half-starved—only the Raja's wife somehow or other used to send them *roti* (but not the cooked rice and gruel). However, when they were set at liberty, the Raja told his youngest daughter to go and live anywhere by dint of her own efforts. Accordingly, Durb Singh and his wife went to live at a far-off place. There they constructed a new house and managed to live for about twelve years or so, for, if Mahaprabhu desires that they should live. Who is there to stop them from living ?

One day the Raja asked his six sons-in-law to go out for hunting and to kill some birds or animals, as he wanted to eat their meat. Accordingly, all the six husbands of Raja's favourite daughters went on their horses with all the marks of decorations (e.g., *mad* and *var*). When this news reached Durb Sundar he also went to hunt, of course, on foot. The six sons-in-law of the Raja went on looking for the animals or birds but could not find any kill. Durb Sundar, too, was not successful, and one day during his sojuorn he came across a well (*cuan*), where he went to quench his thirst. From inside the well came forth the voices of man, tiger and snake, asking Durb Sundar to bring them out from inside the well where they had fallen down. They implored him that if they were helped out they would enter into ceremonial friendship with him. Furthermore, they prayed that by saving them his name would be remembered for a long time to come. On hearing their cries of distress, Durb Sundar threw down a cloth measuring twelve hands in length and managed to bring them out safely and securely. As soon as they came out, ceremonial friendship (*sakhi bandlu*) between Durb Sundar and the rescued ones was entered. During this time, the following talk ensued between them :

The tiger said that he lived in the mountains and so if Durb Sundar so desired he could visit him there. Such a trip to the tiger's dwelling place (den) would prove quite useful to Durb Sundar, for, he would be able to hunt successfully. The man, also, invited him to visit his house at any time convenient to him. The snake, however, felt sorry that he could not extend an invitation to Durb Sundar, for, unlike the tiger and the man, he was not living in a house. But he promised him to come to his rescue if his life was in danger—only he had to remember him and he (i.e., snake) would appear before him.

Durb Sundar, first of all, decided to call upon the tiger. Accordingly, he went along with the tiger to his den. On reaching there, the tiger entertained him lavishly and also tied in the dhoti of Durb Sundar one paisri (seer) of gold at the time of departure. Then, Durb Singh went to the house of the man whom he had rescued from the well. It so happened that the Raja of the kingdom where this man lived had previously announced that whosoever helped his paiks to catch hold of the thief who had stolen gold from his treasury, would claim the Raja's daughter as his wife. And, so, when the said man learnt that the tiger had given him gold, he sent word to the paiks about Durb Sundar. In this manner, the man proved false of the friendship, for, the paiks at once caught hold of Durb Singh, and preparations were made for the marriage of the Raja's daughter with the man in question. Nobody cared to listen to the story of Durb Sundar, and, so finding no other alternative, he requested his captors to release him for a moment so that he might remember his gods. Accordingly, he prayed to the snake to come to his rescue with the result that the snake came and stung the bride (i.e., the daughter of the Raja). All the medicine men of the kingdom (including the Rajguru) tried their best to save the girl from death. When all their efforts ended in vain, the Raja announced that whosoever would cure his daughter from the snake bite would be rewarded with the hand of the girl in question. Hearing this, the hand-cuffed Durb Singh offered to save the girl, who was then almost dying. His handcuffs being removed he again prayed to the snake to cure the girl. And when the snake took out the poison from the girl's body, she revived with the result that she was duly married to him, and, what was more, the Raja gave him half of his kingdom to rule.

After living there for a number of years, Durb Sundar asked the Raja's permission to go alone. The Raja, accordingly, allowed him to depart with full honour. As he was proceeding through the forests, he saw that a wild dog (*ircic netta*) was sitting on guard to its newly born two puppies. On making an inquiry, he learnt that five of its puppies had already been killed by a snake (*bam*). It was then that he killed the enemy (*asur*) of the wild dog, viz., the snake and applied on his forehead the blood of the snake as a mark of victory over the asur. The wild dog was very much pleased to see this and asked him what he wanted. Durb Sundar desired that he may have for some time the two puppies of the wild dog as his companions. The wild dog soon complied with his request with the result that he left accompanied by the two wild dog puppies. Very soon, these puppies managed to kill hare, deer and other animals, making a big heap of them.

In the meanwhile, the six brothers-in-law of Durb Sundar, grown weary and poor in their long wanderings, saw Durb Sundar dressed in best of clothes and provided with heaps of killed animals. Not recognising him, they approached him and almost begged him to allow them to take some of the animals killed by the wild dogs. But Durb Sundar instantly recognized them and told them not to worry, as they were brothers-in-law (*chadu*) ; hence they belonged to the same fold (*gotki log*). Soon after, he ordered the wild dogs to kill some more animals and asked his six brothers-in-law to carry all the heaps of the animals killed by the wild dogs. The six *chadus* of Durb Sundar then went to their father-in-law (*mama*) and handed over to him the heaps of animals killed without, however, mentioning anything about Durb Sundar.

Time passed, and then the Raja again asked his sons-in-law to go and find the tulsi plant, as he wanted to worship the same. So he gave to each of them five pailis of rupees (amounting to Rs 5,000) and asked them to get hold of the tulsi plant as quickly as possible, for, he wanted to fix it on a platform in order to offer worship to it. While the six of the his sons-in-law went on horses, poor Durb Sundar came across a washerman who was carrying the dirty clothes on the back of a horse for washing the same in a tank. As soon as the washerman reached the tank, he removed the dirty clothes from his horse, and tied the horse to a tree. Instead of washing the clothes, the washerman fell sleep. While Durb Sundar was watching the washerman's activities, the horse said, "If I am purchased by some one from the washerman I can show to that person the three parts (lit., sisters, viz., the sora boti, burunda boti and tulsa boti) of the tulsi plant." On hearing it, Durb Sundar at once offered to purchase the horse from the washerman. After purchasing the horse, he was asked by the horse to feed him with *mung, urud* and *kulthi* so that he may become strong enough to carry him up in the upor purne (upper world) where the tulsi plant would be found. After feeding the horse for some time, the horse asked him to jump over him by catching hold of his neck and hairs. Accordingly, when Durb Sundar sat astride the horse, the house took him up to the upor purne. The horse asked him to get down at a place which was similar to the one in the munj purne (middle world) where he had purchased the horse from the washerman. He was further asked by the horse to hide himself in the hollow of a tree trunk when the three sisters (namely, sora boti, burunda boti and tulsi boti) would arrive there to take bath in the tank. He was also asked to steal their clothing when they would go for bathing and

not to attach any importance to their pleadings or abuse. Durb Sundar followed the instructions as given by horse.

Later on, the horse gave him further instructions. Accordingly, on the next day he saw, much to his delight, that the three sisters, decorated with flowers, were being carried in a phul rath (flower chariot) by a number of young women and young men (illecil and illenkul). Dancing by both the sexes was going on all around, and drums (*mridung*) were also being played in the procession. Acting on the advice of the horse, Durb Sundar joined the procession and charmed everyone with his super dance, etc. Mahaprabhu also took notice of him. When an inquiry was made from him as to what he wanted, Durb Sundar said in reply that Mahapraphu should first spit (i.e., promise) and then he would let him know. When Mahaprabhu spat, Durb Sundar requested him to part with his finger-ring. Mahaprabhu, accordingly, threw down the finger-ring and Durb Sundar took it up and fixed it in his little finger (*cita venda*). The girls at once understood that he wanted to get hold of them. So they started crying, but nobody could help them, although they were the sisters of Mahaprabhu. It was then that Mahaprabhu told him to take the three separate parts of the tulsi plant to the munj purne (middle world) and to offer worship to them by remaining on fast on Sunday, but before offering worship (seva) he should fix on their top the ring that he had given him, so that they may become "alive", (i.e. for into a single plant). Durb Sundar then returned back to munj purne along with the three parts of the tulsi plant, but soon after, his horse met its end. In great sorrow, the horse was buried by him after covering its dead body with new clothes.

Afterwards, Durb Sundar met his six *chadus* (brothers-in-law) and told them that he had brought the different parts of the tulsi plant. The six chadus of Durb Sundar, then, hatched a plan to kill him. They asked him to prepare the food while they would go to take bath from a well. After this, when Durb Singh went there to take his bath, the six brothers-in-law pushed him inside the well. They took hold of the different parts of the tulsi plant and went over to their mama, informing him that Durb Sundar had died while trying to get hold of the tulsi plant. But when they were asked to arrange the different parts of the tulsi plant they failed miserably, for, they did not know how to make them "alive'.

In the meanwhile, a batch of the Banjara (Lamankul) passed the well where Durb Sundar was lying. It was decided by them that they would halt there, and so while some were engaged in removing the loads from their cattle, others were busy in pitching

the tents, yet others went to fetch water from the well. While thus engaged in different activities, they heard a cry from inside the well, imploring the people to earn *dharm* by bringing him outside the well. Surprised at these cries, the Banjara travellers did not understand the language of Durb Sundar, and so they asked the Rawats (Gadid) of the nearby village to help them to know what the cry meant. It was under these circumstances that Durb Sundar was brought out from the well. He was put in the sun and properly fed by the Banjaras. He was later on given the work of tending the cattle, and while roaming from village to village he reached his mama's garh. There his wife (i.e. he Raja's youngest daughter) recognized him and took him inside the house. He took his bath, changed his clothes and had his proper meals. It was there that he announced to his wife that since his brothers-in-law (chadu) had deceived him, so he would teach them a lesson. Proceeding directly to his mama's house, he got the different parts of the tulsi plant fixed in a single plant by putting the finger-ring on their top. And, then, he related to the Raja (i.e. his mama) all the past story of his exploits and the treacherous actions of his brothers-in-law. The result was that the Raja felt very sorry for him as well as for his youngest daughter. He also ordered that six sons-in-law should be tied to the legs of a horse, and the horse should be forced to run. Accordingly, the six brothers-in-law of Durb Sundar met their death, and Durb Sundar was entrusted with the Raja's kingdom, and he lived with his wife happily, offering worship to the tulsi plant regularly. He also made it clear to the people living in his Kingdom (Pargana) that in order to offer puja to the tulsi plant the following instructions should be strictly carried out firstly none should eat the cooked food touched by any dog ; secondly, puja should not be offered to the tulsi plant if a dog is seen barking or a pig starts making sounds ; thirdly, one should not eat any cooked food if at that time the name of a dog or a pig is said by any one ; and lastly, those offering puja to tulsi plant should remain on fast.

FOLK-TALE No. 6

Dhurwa rule (Dhurwa Raj) prevailed in the land of the Dhurwa (Desh Dhurwa). Cenov Dora *alias* Machedia Dora was the name of the ruler. He had seven sons. He was in the habit of offering puja with the flowers (*phu*) that he had grown in his garden (*badi* or *wada*).

Once it so happened that horse (*gorrel*) from the upper world (upor purne) visited his garden in the night and ate away all the flowers. The horse continued to eat the flowers every night with

with the result that the ruler was deprived of the flowers required by him for the puja. So, he decided to entrust the work of keeping watch and ward of the garden to his sons. First of all, he asked his eldest son to guard his garden for the night. Accordingly, his eldest son went there, and to keep himself awake he started playing on the flute. But after a while he grew tired of playing different tunes on the flute and was overpowered by sleep. It was during this period that the horse came down and ate all the flowers. And when his father came in the morning with the brass plate (thali) to pluck the flowers from his garden, he could not find a single flower. He became very angry and admonished his eldest son by remarking that if a son could not keep watch over a small garden, how it was possible for him to look after the kingdom. So the eldest son of the ruler was disowned by his father.

Then he asked his next son (*nadbed*) to keep a watch over the garden in the night. This second son of the ruler prepared the powered chillies (*miri gunda*) and took the same with himself to the garden. Whenever he would feel sleepy (*sui cha*) he would take the bitter chillies ; but soon the stock of his chilly powder was finished with the result that when the time of the arrival of the horse came, he had already fallen asleep. Next morning, his father became enraged to see that he had no flowers to offer in the puja. So after abusing his second son by calling him such names as *chor* (thief), Mai-lutia, etc., he also disowned his second son. In this manner, the third, fourth, fifth and sixth son of the ruler was called upon to keep a watch over the flower garden. They all kept themselves wide awake by taking the roasted pods of *jondra* (maize), *barbeti,* etc., but to no avail. They all fell fast asleep when the time of the horse arrived to pluck the flowers. All of them were disowned by the rulers. During these days, the ruler started picking rows with all those who owned horses. But all of them told him that in case a horse would eat or steal the flowers growing in his garden, then some marks of the footprints of the horse would be left behind. Since they could find no such traces of the horses, so they all became quite perplexed to explain the mystry behind this unusual affair.

It was under these circumstances that the turn of the youngest son (vicir toled) of the ruler came one night to keep the watch over the flower garden of his father. He could clearly see that the various means adopted by his six elder brothers to keep themselves awake helped them to remain awake towards the earlier portion of the night, but in the late night they would be overpowered by sleep when the flowers would be eaten. So what he

did was that he took nothing with himself to keep him awake; instead, he went to the garden and had a sound sleep, getting up towards the latter part of the night. That is exactly what happened, for a while he was wide awake a white coloured (*pandra*) horse came and was about to eat the flowers in the garden when this youngest son of the ruler caught hold of his neck. In the meanwhile, two more horses having black and red colours came to eat the flowers. He also caught hold of them. Then, these three horses begged him to release them. They also told him that they would give him three hairs from their bodies, and all that was required of him was to burn any hair and immediately the horse of that particular hair would appear before him. Accordingly, he released them, and they went to their abode forthwith. Next morning, his father saw much to his pleasure that the garden was blooming with flowers. Then and there he banished his six sons but praised his youngest son.

While the six sons of the ruler were moving out of their father's kingdom, they were surprised to find that they were followed by their youngest brother. On an inquiry, their youngest brother told them that he would prefer to go with them rather than live with his father. They tried to dissuade him, but he insisted to follow them whereever they would go. Thus, they all left together, and after some time reached another kingdom (garh). In that garh, they took their shelter in the house of an old widow (*ketal murtaal*), entrusting the work of cooking meals (borka) to their youngest brother.

In that garh, the Raja's daughter, named Chitki Sundri *alias* Eldi Sundri Rani had announced that she would marry only that man who would talk with her while sitting upon a flying horse (*vel-lan gorrel*). As soon as the six brothers learnt about this announcement, they all started to get hold of all the available horses. They tried their best to beat (*phat phat*) them so that their horses would fly up, but these horses only ran faster and faster. Their youngest brother working as their cook (borka) burnt the hair of the white coloured horse with the result that the white horse appeared soon. He rode on it, and the white horse took to wings. He proceeded towards the palace (*upper dabba*) of the princess, where he met her and talked with her for a little while. The princess wanted him to wait for some time in order to see how others (including his six elder brothers) were driving the horses to fly to her. After seeing this scene, he took leave from her, asking her to wait for another two to three days. Thereafter, he returned back to the quarters lent by the old widow

and cooked the meals. When his elder brothers returned, they were pleased to know that the meals were ready. Then the youngest brother made an inquiry from them as to whether they had seen the princess. In reply, they told him that they were unsuccessful in "flying" their horses. To this their youngest brother advised them to beat their horses very hard.

Next day, the elder brothers decided that since their youngest brother was clever and brave, so it would be better for them to tie him rather than take any risk with him. Then, they proceeded to try once again with their horses in order to force them to fly. In the meanwhile, the youngest brother requested the old widow to untie him for some time and then he managed to burn the hair of the black coloured horse. Immediately, the black horse appeared and he rode to meet once again the princess. On being pressed to disclose his identity, he assured her that he would give her some marks of recognition next day. Thereafter, he went back to his quarters and asked the old widow to tie him up again. When his elder brothers returned, they asked whether the meals were ready. The youngest brother replied that as he was tied up so he could not cook the meals. Thereafter he was untied and asked to prepare the meals. On the third day, he was again tied, but thanks to the old widow, he managed to meet the princess on the red coloured horse. As already promised, he gave her his finger-ring. When his brothers returned, they told him that on the next day the princess would identify the man who had been meeting her continuously for three days riding on flying horses of different colours.

So, on the next day when the six elder brothers were about to tie him up, as usual, he requested them to allow him to accompany them. Satisfied that their youngest brother was not the one whom the princess would pick and choose for her marriage, they allowed him to accompany him. While they were standing in a row (*dande-dand*), the princess was asked by her father, the ruler of the kingdom, to go over and catch hold of the man who was meeting her on the flying horses. Very soon she came towards the direction where the seven brothers were standing, and then, she caught hold of the youngest brother and took him to her father. His six brothers felt surprised at this, for, they had tied him up for all these days. However, next day the marriage of their youngest brother was celebrated with the princess with all pomp and show.

After about a week or so, the youngest brother went along

with his newly married wife to the quarters of the old window. He found his six elder brothers there and, as of old, he started preparing the meals, asking them to go and take their bath from the well. When he had completed cooking the meals, he too went to the well to bathe before eating the meals. His elder brothers were waiting for this chance, for, they soon pushed him inside the well. Then, they informed his wife that her husband fallen inside the well and was dead, so they asked her to accompany them. But his wife refused to go along with them and sat near the well. In the meantime, the dead body of her husband came floating in the well. She brought it out and started weeping and cry. Her lamentations reached above in the upper world and was heard by Bhagwan (Mahaprabhu) who had taken his bath and was basking in the sun. He wondered as to what sort of misery had taken place in the manj purne (middle world). Accordingly, he sent the crow to find it for him. After making searches everywhere, he was able to spot out the place where the wife of the youngest brother was lamenting. On seeing him sitting near her, she said that if her husband would have been alive, he would have eaten something, and thrown some crumbs for it to eat. Not finding anything to eat, the crow then went to Bhagwan and reported to him that there was nothing wrong in the middle world. But, some time later on Bhagwan heard again the wailings. So, disbelieving the crow's version, he sent the bee to report to him about it. When the bee reached the spot and began humming (*burrun-burrun*) near the wife of the youngest brother, she said that if her husband had been alive, then they would have planted flowers on which the bee would have sat. On hearing this, the bee went up to Bhagwan and gave the correct version of the wailing. Then Bhagwan called for the spider and asked it to prepare a ladder so that he may come down. Accordingly, a ladder was prepared and Bhagwan came down. He then asked the wife of the youngest brother first to bathe the dead body and then to lay it on the plantain leaves. Afterwards, Mahaprabhu sprinkled *amrit* (ambroisa) water on it. Soon, her dead husband revived, and on getting up remarked that he had been asleep all this while. Thereafter, Mahaprabhu disappeared, and they proceeded towards his father's kingdom. His father was very glad to receive him and after his death he was made the ruler. Like his father, he used to offer puja with flowers.

FOLK-TALE No. 7

Once there lived two brothers in the middle world. While the elder brother was married, the young one was

still a bachelor (*tengva*); both of them were jointly cultivating the rice fields. The elder (married) brother used to sleep inside the house and the younger (unmarried) brother was sleeping in the field house. As the time passed, the elder (married) brother became lazy and indolent with the result that he became ill. The mediums (sirah) and the medicine-men (*guneya*) were consulted to cure him of his illness, but they all failed in their efforts. So, one night the two Jam-logs arrived, and when they touched the body of the married brother he was dead. Thereafter, he was asked by the Jam-logs to walk along with them. It so happened that they proceeded by the side of the field house where the younger (unmarried) brother was lying awake. He was very much surprised to see that his elder (married) brother who was lying dangerously ill at home, was walking along with some unknown figures. In the meanwhile, one of the Jam-logs accompanying the elder (married brother) broke one of the paddy stalks (cen vercil) standing in the rice fields of the two brothers. When, however, the party reached the upper world (uper porte), Mahaprabhu inquired whether they had brought the required man. The Jam-logs replied the affirmative, and Mahaprabhu saw the relevant papers (*parca* or *kaged*) and was satisfied that no mistake had been made by them. While he was engaged in this work, Mahaprabhu suddenly saw the paddy stalk lying in the hand of one of the Jam-logs. Mahaprabhu inquired from whose fields was that paddy stalk brought by him. The Jam-log replied that the field belonged to the same *jiva* (soul or spirit) whom he had brought. Mahaprabhu, then, told him that he was required to bring only the jiva, but not the paddy stalk, which had been brought forth by the hard labour (lit. earned). Thereafter, Mahaprabhu counted each rice particle contained in that stalk and found that it contained as many as hundred (lit. five kodies) of rice particles. Accordingly, Mahaprabhu ordered the Jam-log to go and work in the family of the deceased till that time when hundred granaries would be field with paddy.

Next morning, the younger (unmarried) brother returned home and heard wailing and weeping coming from his house. On reaching home, he was informed that his elder (married) brother had died almost at the same time when he had seen him walking along by the field house. He sent words to his consanguineally- and affinally-related kins (kutamb and saga), and with their help the elder (married) brother was buried in the grave, and the relatives returned back to their houses. Soon after, the Jam-log dressed in shirt and dhoti with a turban on his head presented himself before the younger (unmarried) brother. The Jam-log wanted

to know if he would allow him to live and work in his house, as he had nowhere else to go and work. The younger (unmarried) brother agreed, and the Jam-log started living in his house and working in the fields. After a while, the death anniversary (cutak) of the deceased was preformed, and as also the marriage (tika) of the younger brother with the widow of his (deceased) elder brother (*andil-un-curca*) was duly celebrated.

Some time later on, the Jam-log helped his master to reap a rich harvest with the result that he managed to fill a number of granaries. Many years passed like this, and his master became a very rich man (*sahukar*). Just when, according to the calculations of the Jam-log, it would take another three years for him to get his release, he saw that a spirit (*kodia vendid*) had entered inside the water vessel that his mistress was holding on her head after fetching the water from the water source. He was about to enter into her body when the Jam-log of Mahaprabhu started pelting stones on the water vessel and managed to drive the spirit away. Such an action on the part of the Jam-log, who was working as a servant (*kamia*) of her husband, made her very angry, and she abused him.

However, when his time for release was approaching, the wife asked her husband, now grown a sahukar, to take her to the Godavari for bathing, as people from all over the country (*desh-ke-log*) were going over there for pilgrimage. The husband was very cross with her, for, how he could free himself from the work. But the Jam-log volunteered to accompany her to the Gadavari and asked her to make the necessary preparations for undertaking this trip. So, then, they left together; but the Jam-log took her through a different route than that followed by the rest of pilgrims. After travelling for about a week, they reached a place which was full of mud. The Jam-log told her that was the Godavari. When she did not believe him, he asked her to prepare the food. After eating their meals, the Jam-log again asked her to go over to the muddy place to take bath. When she refused, he put the mud over him. She was very much offended by this action of the Jam-log, so she abused him. It was then that the Jam-log narrated his story and told her that she should go back herself as the time for his release had come. Accordingly, he went to the upper world, leaving the woman to find her way back home. When she reached her house, she told the story to her husband, who said that it was due solely to the help rendered by the Jam-log that they had earned so much that it would last for at least three generations.

CHAPTER TWELVE

APPENDIX

The Villages Visited For Short-term Studies

Leda village lies nearly two miles east of the road-side village of Tongpal, being connected by a cart-road. Not only is a distillery found in the village but also the weekly market takes place there on every Saturday in the morning hours. The following is the caste-wise composition of 83 households living in three dispersed hamlets of the village in January, 1958 :

Kalhar Para	Kallar	5 households
	Dur Gond	5 ,,
	Gond	5 ,,
	Dhurwa	3 ,,
	Rawat	1 household
	Dhakar (Chatri)	1 ,,
Naik Para	Dhurwa	11 households
	Gond	8 ,,
	Bhumia (Mati)	7 ,,
	Kallar	1 household
Dhurwa Para	Dhurwa	24 households
	Rawat	9 ,,
	Gond	3 ,,
Total		83 ,,

Mention may be made that the Patel of the Leda village is a Kallar, the village priest is a Dhurwa, and the Kotwar is a Mahar. In the village, there are a few wells which provide water supply to the villagers.

Marjum village is situated towards the west of Marenga village, and in order to reach this village from Marenga village one has to climb nearly one and half miles over the Dangar Candi hill. This village marks the western-most Dhurwa village in this particular area. It was noted that the Penda-cultivation is resorted to by the Marjum villagers in a limited area on the steep hill slopes of the Dangar Candi. The following is the caste-wise composition of 62 households found living in the two dispersed hamlets of the Marjum (or Marjung) villages as found on 29.3.58 :

Patel Para or Bandam Para	Maria (Bison-horn)	3	households
	Dhurwa	17	,,
Margum proper	Maria (Bison-horn)	4	,,
	Dhurwa	38	,,
Total		62	,,

A single Rawat household settled in the village since a long time left for good in 1957 for Pondum (which is about 14 miles from Marjum) with the result is that the grazing of the village cattle has been taken by a Maria, while the Rawat shrine of the village is neglected. The consecrated rice seed sowing ceremony is performed on behalf of the whole village by a Dhurwa Pelac (Shainu by name belonging to the Cobra clan) in the Bhandarin Mata shrine. In addition, there are three more shrines, known as Sonadei Mata, Sondra dei and Pardesin Mata. All these are attended to by Dhurwa Pujaris. It was stated by Dhurwa informants of the village that the head portion of the pig and/or the chicken sacrificed in the Bhandarin Mata shrine is eaten by all the Dhurwas, irrespective of the fact whether he is affiliated to the Cobra or the Tortoise clan. Further, the Patel of the village is a Dhurwa while the Kotwar is a Maria residing in Chikpal village (6 miles from Marjum). The weekly markets visited by the Marjum villagers are Leda, Darba, Paknar, Katta Kalyan and Kokanar. The water supply is provided by means of the springs.

Tahakwada village lies quite adjacent to the Tippin Pal Para of the Marenga village. It's Patel is a Dhurwa (Sono by name); so also is the Kotwar Dhurwa (Pandru by name). The Pelac too is a Dhurwa (Diaru by name). The following is the caste-wise composition of 45 households living in three hamlets of the village, as noted in March, 1953:

	Maria (Bison-horn)	20	households
Nawaguda	Dhurwa	2	,,
	Halba	1	household
Tahakwada proper	Dhurwa	17	households
Patel Para	Dhurwa	5	,,
Total		45	,,

While the Pelac performs the common ceremonies for the village, as a whole, in the Bhandarin Mata shrine, the other shrines in the village are the Boheria Mata shrine, whose priest is a Dhurwa. The consecrated rice seed sowing ceremony is performed by the villagers like the Marenga villagers on Sunday, while the ceremonial hunting is performed along with other villagers on

Sunday. Separate burial grounds are found in the village for the different caste-groups settled in the village. The weekly markets usually visited by the villagers are Kokanar, Darba and Leda. It may be added that the river Ziram separates the Nawaguda Para from the other two hamlets of the village.

Hamirgarh village is situated at the confluence of the Zairam and Jaimer rivers and it situated about four miles from the road-side village of Tongpal. It consists of six dispersed hamlets, namely, (i) Behada Para (containing Dhakar households), (ii) Chalkiras Para (containing Telinga, Panara and Kallar households), (iii) Panara Para (containing a large number of Panara households), (iv) Koruli Para (containing Muria and Telinga households), (v) Kaseinpal (largely Muria households), (vi) Bagham (also a Muria households), and Ludkiras (a mixed village). A Rawat family has settled in 1957-58 in the village, and it has started taking care of the village cattle, but previously a Muria was performing this service for the village. The Patel of the Hamirgarh village is a Muria (Podia by name), and the Kotwar is also a Muria (Hunga by name). There are, in addition to the two perennial streams, a number of the unlined bricks in different hamlets of the village, and recently two brick-lined wells have been established in two hamlets. There is also the shrine called the Danteshwari Mata in the village, where Mandai (fair-festival) and other ceremonies take place for the Pargana of Hamirgarh, as a whole. Its priest is a Dhakar who is assisted in his priestly functions by the elderly persons belonging to other caste groups. There are also a number of other shrines in the village, e.g., Chikat Raj, Kodgodin, Sitala Mata, etc., represented by a simple wooden post, small stones embedded in earth or a carved female image.

Littiras village lies immediately to the south of Marenga village and contains nearly 55 households who are found living essentially in two hamlets of the village, viz., (i) Patel Para (40 households, consisting of 37 Dhurwa, 2 Rawat and one Maria) and (ii) Ludkiras Para (15 households, consisting of 12 Dhurwa, 2 Mahara and one Kallar). The Patel of the village is a Dhurwa (Rama by name) and it's Kotwar is a Mahara. The Pelac of the village is a Dhurwa and its two shrines in the village are called Kongarachin Mata and Kani Mata. An interesting feature in the settlement pattern of the village is that some of the houses built in the Ludkiras Para are grouped within the Littiras village, while the other houses made in continuity with the houses are included in Hamirgarh village, without any mark of distinguishing the two villages of Littiras and Hamirgarh.

Kokanar is a road-side village, being situated nine miles south of Tongpal. In addition to a weekly market which takes place on every Friday, a large-scale fair-festival (Mandai) is held every year in the village, as was observed by us on 20.2.59 when the rituals concerning the Mandai were performed in the shrines of Jalni Mata and Kankalin Mata by the Dhurwa Pelac of the village, while next day the Dhurwa dancers perform regular Birli dances. A large number of people of both the sexes attend the Mandai. Special invitations are sent to the following villagers who participate along with the symbols of their deities :

Pratapgarh, Kokawada, Hamirgarh, Kinderwada, Rokhel, and Mohpaddar. The participants belong to such ethnic groups as the Mahars, Chattris, Murias, Marias, Rawats, Kumhars, Kostas, Khatis, Rajputs, Mangans, Musalmans, Christians, Kewats, Panaras, etc. It may be added that a large number of Dhurwa households are found living in this road-side village, while a number of traders have established their concerns there more or less permanently.

Tongpal village is the road-side village lying at a distance of 35 south of Jagadalpur. A permanent shop was opened there by a Kayasth in 1956-57, where fried articles and tea were supplied to the bus passengers travelling south or north of Tongpal, as also the various articles of everyday use are supplied to the local people living in and around the village. The shrine of the Bhandarin Mata is located within the village, and it is in this shrine that the rituals are performed every year in common by the four neighbouring villages under the supervision of the Cetia of Tongpal, who is the area-wise tribal headman of the Dhurwa in this area. Once a week cock-fights are also held in the open ground of the village. Tongpal consists of two hamlets. The Bungalow Para, situated on the road-side and called as such, because nearly 50 years ago a European forest contractor, Mr. Sinlair, had lived there in a bungalow, and the Patel Para which lies nearly a furlong from the road-side Bunglow Para, the latter being considered as the original settlement area. The following is the ethnic composition of 48 households living at present in the two hamlets of the village :

Bungalow Para	Dhurwa	13 households
	Ghasia	2 ,,
Patel Para	Dhurwa	16 households
	Sundi	2 ,,
	Rawat	2 ,,
	Dhakar	2 ,,
	Panara	3 ,,
	Muria	1 household

Patel Para	Khati	1	household
	Telinga	1	,,
	Karan	1	,,
	Kayasth	1	,,
	Telinga	1	,,
	Mahar	1	,,
	Musalman	1	,,
Total		48	,,

Permaras village lies a little more than a mile towards the south of Tongpal. The (Dhurwa) priest who performs the necessary rituals in the Bhandarin Mata shrine for the four neighbouring villages resides in Permaras village. It consists, at present, of two dispersed hamlets, called Guter Para and Permaras proper, where live twentytwo households comprising of three Murias, four Kallars and fifteen Dhurwas. The Patel of the village is a Kallar.

Jaimer village lies at a distance of half a mile to the west of Chalkiras Para of the Hamirgarh village. It's Patel is a Dhurwa (Budha by name), and it's Kotwar is a Muria (Unga by name). The Dhurwa Pelac attending to the Maoli Mata Gudi in the village is affiliated to the Cobra clan. So also are other functionaries, e.g., Bodka, Dora and Kicek belonging to the Cobra clan. There are fortynine households living in the two hamlets of the village, as the following figures recorded on 4.4.59 show :

Dhurwa Para	Dhurwa	27	households
	Muria	2	,,
Muria Para	Dhurwa	3	,,
	Muria	17	,,
Total		49	,,

Darba village is situated on the top of the Darba Ghats and twentytwo miles south of Jagdalpur. The Patel of the village is a Rawat while its Kotwar is Mahara. A police station (thana) and other government offices are established in the village. A number of houses have been built on both the sides of the metalled and motorable road, close to the thana, with the result that this area is called Thana Para, where, in addition to the quarters of the government officials, there are thirteen householders who belong to different ethnic grodps, viz., Rawats (7), Dhurwa (1), Jodia Maria (1), Dhur Gond (1), Dhakar (3). The other hamlets in this road side village are Bodka Para (six Dhurwa householders), Sulpi Padar Para (six Dhurwa householders), Tanga Chua Para (five Dhurwa householders), Para Mukhya Para (five Dhurwa householders). There are two shrines, namely, Bahman Dei and Chukawadin Maoli Mata, which are attended by a Dhurwa pujari and Sirha. Drinking water facilities are provided by wells. It was stated that among the Dhurwa of Darba, there is found the Gadit

Kul, whose function is to supply milk during the rituals. Weekly market takes place in the village on every Wednesday.

Chindawada village is situated about three miles west of the road side village of Darba, being connected by foot track. It's Patel is a Dhurwa while it's Kotwar is a Mahar. It is stated that as much as Rs 918.24 were paid by the Chindawada villagers as the land revenue in 1958-59. The population of the village was reported to be 919 persons in 1951. It is a largely spread out village, consisting of eleven hamlets, being inhabited by 264 households, as the following figures as noted by us in December, 1959 show :

Permaras	Dhurwa	12	households
	Lohara (Maria)	5	,,
	Rawat	2	,,
Rampal	Dhurwa	22	,,
	Mahara	15	,,
	Kumhar	1	household
	Maria	1	,,
Upar-ras	Dhurwa	15	households
Mendabhata	Mahara	8	,,
	Dhurwa	5	,,
	Maria (Gond)	4	,,
Kawa-ras	Dhurwa	15	,,
	Dhurwa	6	,,
	Maria	9	,,
Littipal	Dhurwa	8	,,
	Rawat	1	household
	Maria	1	,,
Kokar-ras	Dhurwa	28	households
	Rawat	2	,,
Jam-wada	Dhurwa	15	,,
	Rawat	1	household
Dhur-ras	Dhurwa	20	,,
Chapar-ras	Maria	40	households
	Dhurwa	15	,,
Juna Para	Mahara	13	,,
Total		264	,,

There are a number of shrines, chiefs of which are the Maoli Gudi and Bhandarin Gudi. The weekly markets visited by the villagers are as follow :

Name of Market	Day of Visit
Darba	Wednesday
Dilmili (Gudra)	Friday
Chingpal	Thursday
Tokapal	Monday
Paknar	Tuesday
Jagdalpur	Saturday and Sunday

It was also reported that traditionally Chindawada village along with Sitapur, Netanar and Tirathgarh, was included under Sitapur Pargana, and that nine persons were to be arranged to be sent to the Raja of Bastar to work as his eight-Pahria by the Sitapur Parganias. In the year under reference, two such eight-Pahrias were deputed by the Sitapur Parganias from Chindawada village to work as the eight-Pahria of the Raja for about a year. Formerly, these eight-Pahrias were given at the end of their service, five hands of cloth (*putka*), eight paili of rice, four paili of pulse, three paili of salt, one suli of edible oil, one suli of wheat and fifty paise in cash. But for the last two years or so no such payments are made by the Raja to his subjects. It was further mentioned that whenever any Mandai takes place in Chindawada village, invitation is sent to the Marenga villagers to attend the fair-festival. Unlike the Marenga village, Chindawada village has been surveyed in 1925.

Kodripal village is situated nearly four miles to the south-east of Leda village, being approached through bullock cart road. The Patel is a Dhurwa, while the Kotwar is a Madia. The Dhurwa of the village have got, in addition to the Pelac Borka Kicek and Dora functionaries, Phaneks also. Traditionally, the village formed a part of Kokawada Pargana which included the following villages: (i) Sautnad, (ii) Kokawada (excepting some portion), (iii) Jangarpal (later on included in Kokanar Pargana), (iv) Gadam-ras, (v) Irja-Pal and (vi) Kodripal village. The following is the ethnic-wise composition of the 135 households settled in Kodripal village, as noted on 29.12.59:

Metapal	Madia	26 households
	Rawat	1 household
Manji Dihi	Dhurwa	24 households
	Mahara	2 ,,
Singa-ras	Dhurwa	8 ,,
	Kallar	1 household
Bale-ras	Madia	15 households
	Rawat	1 household
	Lohar	1 ,,
Kokawada	Dhakar	16 households
	Rawat	1 household
	Kallar	1 ,,
Kodripal	Dhurwa	12 households
	Dhakar	7 ,,
	Panka	15 ,,
	Rawat	4 ,,
Total		135 ,,

The important shrines in the village are (i) The Jalni Mata which is represented by a carved stone image with four hands kept

inside a four-sloped tiled hut and (ii) The Bhandarin Mata represented by a knife kept inside an earthen vessels which is placed on a bamboo platform built inside a two-sloped open hut. Separate burial grounds are provided for different ethnic groups settled in the village. The village being built near the Baru or Zairam river passes by the side of some natural springs, locally called the Illecial gutta, Urumal, Dhurmel and Dongi Dara. As already mentioned, some portion of Kokawada is included under the Kodripal village.

Puspal village is situated nearly three miles towards the south-east of Kodripal village. A weekly market takes place in the village, as was noted on 30.12.59, when it was observed that a large number of the sellers and buyers had come to attend the market from such Orissa villages as Mohpaddar, Kosrabhata, Gobind Pal, Temrupal, etc., belonging to Rawat, Dhurwa, Koya ethnic groups. It appears that such articles as rice/paddy, dry fish, and turmeric brought from Orissa are sold in Puspal market, where the traders from Kokanar purchase these articles in lot for being sold in other places. The Patel of the Puspal village is a Kumhar, while its Kotwar is a Dhurwa. Traditionally, the village formed a part of Chindgarh Pargana (whose Manji is a Halba). There is a distillery in the village. The Pelac of village is a Dhurwa, being attached to the shrine called the Machiria Mata (*alias* Donger Dev or Mati Dev). The following is the ethnic composition of the twenty-five households settled in the village:

Dhurwa : 20	Kumhar : 7
Mahar : 2	Dhakar : 2
Sundi : 1	Kallar : 1
Rawat : 2	

Kinderwada village lies immediately south of Puspal, where the Bhimsen river from north and Baru (Ziram) river from the west join the Kolab (Sabari) river. In fact, people on their way towards Kikerpal, Oler, Netanar, Talnar, Guma, Tumukpal and other villages cross the river Kolab in the boats (*oda*) at a convenient place (*ghat*) situated on the east of Kinderwada village. Fishermen from Kokanar and other villages, especially the Kuruk, visit this area to catch fish during the summer months. Kinderwada village formed a part of Chindgarh Pargana, but the concerned Naik of the Dhurwa (Ganga Koreng by name) lives in Pakela village, visits them once a year and is duly honoured (man) by being treated to wine, rice bear and chicken. It was also stated that whosoever runs the distillery at Puspal, he is required by custom to offer the necessary rites through the (Dhurwa)

Pelac of Puspal and Kinderwada before he starts the sale of the distilled liquor. The most important shrine in the village is Bhandarin Mata, where the villagers of Tumukpal, Surrepal and Kinderwada perform the rites together in common. Neither the Phanek nor the Gaded not even Neutak is found among the Dhurwa of the village, but only the four functionaries are there, namely, Pelac (Ghasi by name), Borka (Iyeta by name), Kicek (Mongla by name whose father is said to have migrated from Tulsi) and Dorel (Mara by name). The village is comprised of three dispersed hamlets, namely, Kala Para (having twenty Dhurwa households), Kokral Bhata Para (having eight Dhurwa households) and Pelac Para (having thirty Dhurwa households, five Lohar households, three Kallar households and one Rawat household). The Patel of the village is a Dhurwa, while the Kotwal is also a Dhurwa, being also attached to three neighbouring villages, viz., Tumukpal (A Maria village), Netanar (a Dhurwa village) and Surepal (a Dhurwa village). It may be added that the jurisdiction of the Naik of the Dhurwa (Ganga Dhurwa) is spread to the following villages: Kinderwada, Mundaval, Kumakoleng, Chittalnad and Chiurwada; but for the Mandai/ Bazar fair-festival, Kinderwada village is tied with its Pargana village of Chindgarh, where at times they have to contribute towards the sacrifice of a buffalo and other expenses incurred in connection with the performance of fair-festivals,

REFERENCES

Brett, E. A. de		C. P. Gazetteer—Chhattisgarh Feudatory States (Bastar), para 15-69, pp. 25-70.
Burrow, T. and S. Bhattacharya	1953	The Parji Language—A Dravidian Language of Bastar, Preface.
Census of India	1931	Vol. VII (C.P. & Berar), Part 1A (Report), p. 385.
,,	1952	Bastar District Census Handbook (M.P.), pp. 1-3 & 122-220.
,,	1953	Madhya Pradesh (Report) Vol. VII, Part 1A, pp. 1, 29 & 285.
,,	1962	Paper No. 1, Final Population Tables LXVII, pp. 28 & 338.
Elliot, C.	1856	Report on Bastar, para 3.
Elwin, Verrier	1947	The Muria and their Ghotul, pp. 11 & 697.
,,	1950	The Bondo Highlanders, pp. 35-37.
,,	1955	Religion of an Indian Tribe, p. 65.
Ghurya, G. S.	1953	Indian Sadhus, p. 154.
Glassfurd, C. L. R. (Capt.)	1862	Report on the Dependency of Bustar, Tribes and Castes.
Grigson, W. V.	1938	The Maria Gonds of Bastar, pp. 1, 14, 39, 49, 176 and Appendix A.
Lowie, R. H.	1950	Social Organisation, pp. 68-69, 236 & 243.
Majumdar, R. C. and Pusalkar	1957	Struggle for Empire, Ch. VIII and Genealogy (51).
Murdock, G. P.	1949	Social Structure, pp. 102-106 & 301.
Royal Anthropological Institute	1964	Notes and Queries on Anthropology, p. 64.
Russel, R. V. and Hiralal	1916	The Tribes and Castes of Central Provinces of India, Vol. IV, p. 372.
Rakshit, H.	1960	A Short Note on the Anthropometry of the Dorlas and the Dhurwas of Bastar, Man in India, Vol. 40, No. 1.
Sinha, S.	1958	Seminars on the Field Methods and Topics for Field Investigation relating to Bastar (July 29th to September 19th).
Sinha, S., B. K. Das Gupta and H. N. Banerjee	1961	Agriculture, Crafts and Weekly Markets of South Manbhum, Bull. Anth. Sur. of India, Vol. X, No. 1, p. 134.
Thakore, Kedar Nath	1908	Bastar Bhushan (Hindi), Tribes and Castes of Southern India, p. 208.

Thusu, Kidar Nath 1958 A Preliminary Note on the Clans and their Segmentation among the Dhurwas of Marenga (Bastar)—Abstract in the Proc. of 46th Session of Ind. Sc. Cong., p. 427.

" 1959 Inter-ethnic Relationship and Social Mobility Movements among the Dhurwas of Marenga, (Bastar Dist., Bull. Dept. Anth. Vol. VIII, No. 2, pp. 63-73).

" 1963 The Dhurwa Tribe of Bastar, Vanyajati, Vol. XI, No. 1, pp. 16-21.

" 1963 Distribution of the Dhurwa Population and their Habitat in Bastar, Vanyajati, Vol. XI, No. 4, pp. 157-163.

Thusu, Kidar Nath and K. S. R. Iyer 1965 The Dhurwa Marriage Songs, Vanyajati, Vol. XIII, No. 1, pp. 15-21.

— 1961 Dhurwas of Bastar, Bull. Tribal Research Institute, Chhindwara, Vol. I, No. 1, pp. 19-69.